TECHNICAL MANUAL

SAILOR®

SAILOR SYSTEM 5000 GMDSS CONSOLE

Thrane & Thrane

Disclaimer

Any responsibility or liability for loss or damage in connection with the use of this product and the accompanying documentation is disclaimed by Thrane & Thrane. The information in this manual is provided for information purposes only, is subject to change without notice and may contain errors or inaccuracies.

Manuals issued by Thrane & Thrane are periodically revised and updated. Anyone relying on this information should acquire the most current version e.g. from the Thrane & Thrane Extranet at http://extranet.thrane.com.

Thrane & Thrane is not responsible for the content or accuracy of any translations or reproductions, in whole or in part, of this manual from any other source.

CONTENTS

1 General information

With the System 5000 GMDSS console, all the communication equipment of the ship can be combined in one small, compact console.

One of the main purposes of the console is to make the best possible use of the limited space on board a ship. Furthermore, the fact that all the equipment is kept in the same place makes installation easy and fast. Finally, the modular structure of the system means that it can easily be altered if for example a need to have it extended should arise.

The standard console includes the following: Emergency light, battery panel, and connection board. Furthermore, the console is designed with removable front plates for easy service and maintenance.

The console can be configured to match any maritime communication need. On the following pages, some typical configurations are shown.

2 Installation

2.1 Dimensions

Console type numbers and part numbers refer to console hardware only, i.e. an empty console with only battery panel, emergency light and connection board(s) installed.

Equipment illustrated for reference only.

Type: 5135C
Console part no.: 405135C-THRxx

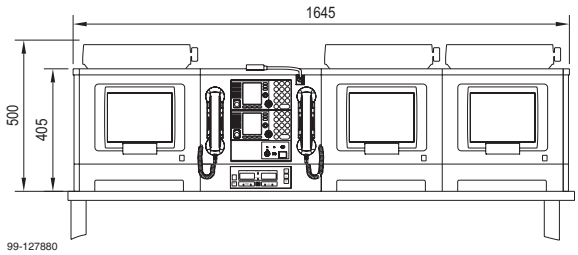

2 pcs. CU51x0 MF/HF Control Unit
TT-3043CP Console Panel
3 pcs. H1252B Parallel Printer
3 pcs. TT-3606E Message Terminal

Weight:

excl. units	60 kg.
incl. units	89 kg.

Type: 5134C
Console part no.: 405134C-THRxx

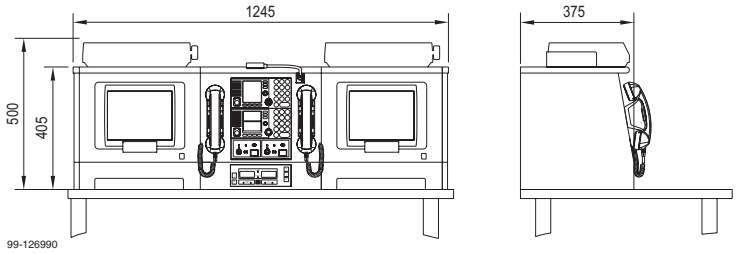

CU51x0 MF/HF Control Unit
RT502x VHF Radio
TT-3043CP-2 Console Panel
2 pcs. H1252B Parallel Printer
2 pcs. TT-3606E Message Terminal

Weight:

excl. units	45 kg.
incl. units	65 kg.

Type: 5134B
Console part no.: 405134B-THRxx

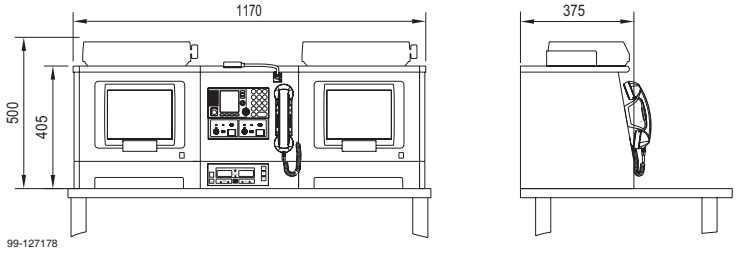

CU51x0 MF/HF Control Unit
TT-3043CP-2 Console Panel
2 pcs. H1252B Parallel Printer
2 pcs. TT-3606E Message Terminal

Weight:

excl. units	45 kg.
incl. units	65 kg.

Type: 5134F
Console part no.: 405134F-THRxx

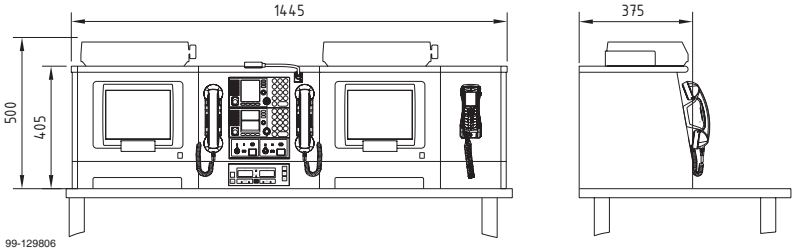

CU51x0 MF/HF Control Unit
RT502x VHF Radio
TT-3043CP-2 Console Panel
2 pcs. H1252B Parallel Printer
2 pcs. TT-3606E Message Terminal
1 pcs. TT-3670 IP Handset

Weight:

excl. units	50 kg.
incl. units	71 kg.

Type: 5134G
Console part no.: 405134G-THRxx

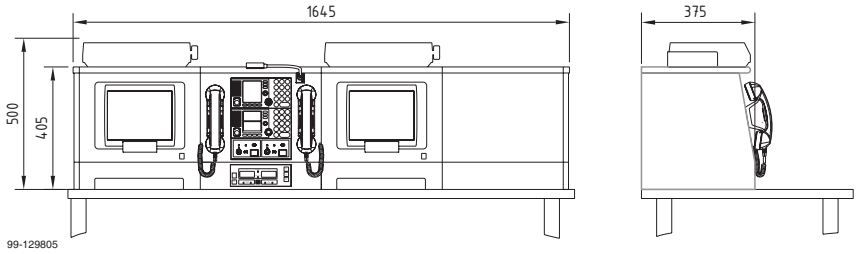

CU51x0 MF/HF Control Unit
RT502x VHF Radio
TT-3043CP-2 Console Panel
2 pcs. H1252B Parallel Printer
2 pcs. TT-3606E Message Terminal

Weight:
excl. units 58 kg.
incl. units 78 kg.

Type: 5133C
Console part no.: 405133C-THRxx

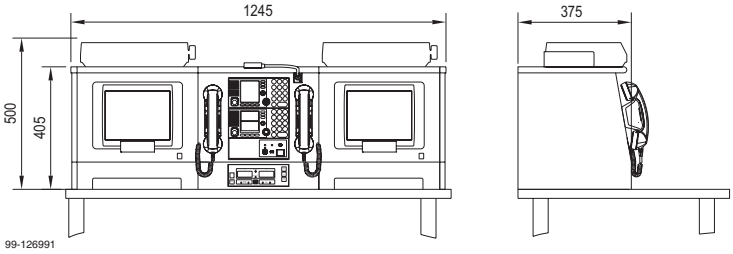

CU51x0 MF/HF Control Unit
RT502x VHF Radio
TT-3043CP Console Panel
2 pcs. H1252B Parallel Printer
2 pcs. TT-3606E Message Terminal

Weight:
excl. units 45 kg.
incl. units 65 kg.

Type: 5133G
Console part no.: 405133G-THRxx

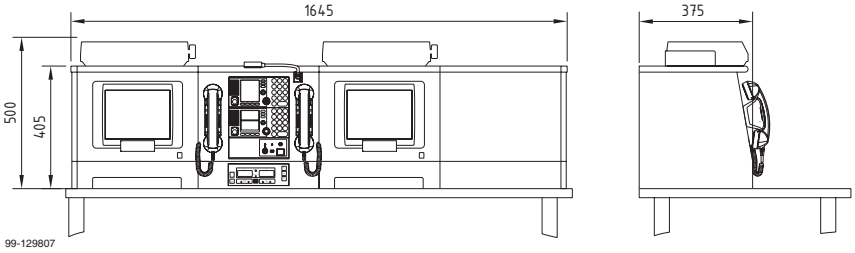

CU51x0 MF/HF Control Unit
RT502x VHF Radio
TT-3043CP Console Panel
2 pcs. H1252B Parallel Printer
2 pcs. TT-3606E Message Terminal

Weight:
excl. units 58 kg.
incl. units 78 kg.

Type: 5133F
Console part no.: 405133F-THRxx

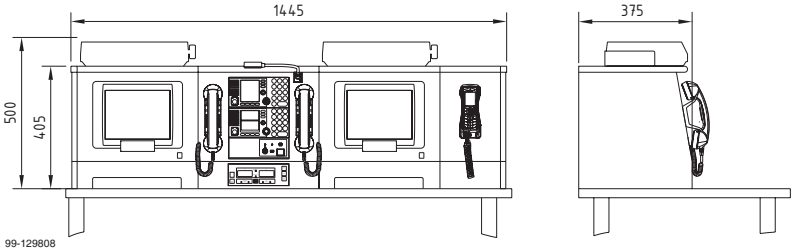

CU51x0 MF/HF Control Unit
RT502x VHF Radio
TT-3043CP Console Panel
2 pcs. H1252B Parallel Printer
2 pcs. TT-3606E Message Terminal
1 pcs. TT-3670 IP Handset

Weight:
excl. units 50 kg.
incl. units 71 kg.

Type: 5132C
Console part no.: 405132C-THRxx

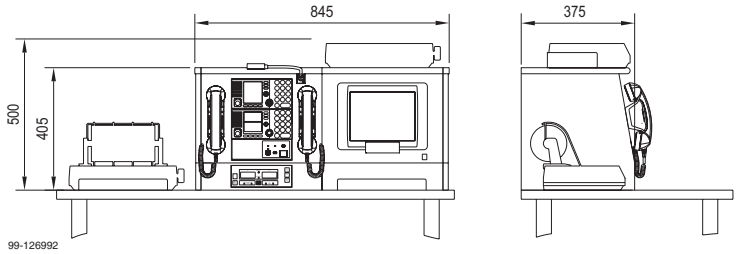

CU51x0 MF/HF Control Unit
RT502x VHF Radio
TT-3043CP Console Panel
2 pcs. H1252B Parallel Printer
TT-3606E Message Terminal

Weight:

excl. units	30 kg.
incl. units	51 kg.

Type: 5132F
Console part no.: 405132F-THRxx

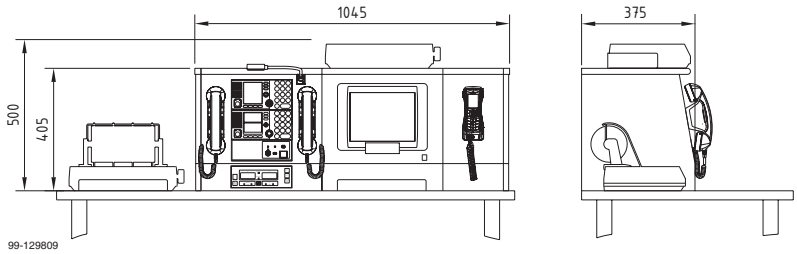

CU51x0 MF/HF Control Unit
RT502x VHF Radio
TT-3043CP Console Panel
2 pcs. H1252B Parallel Printer
TT-3606E Message Terminal
1 pcs. TT-3670 IP Handset

Weight:

excl. units	35 kg.
incl. units	57 kg.

Type: 5132B
Console part no.: 405132B-THRxx

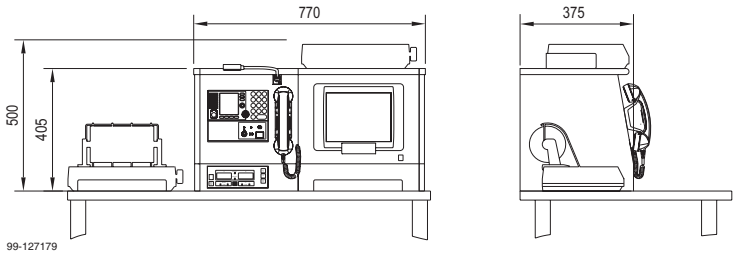

CU51x0 MF/HF Control Unit
TT-3043CP Console Panel
2 pcs. H1252B Parallel Printer
TT-3606E Message Terminal

Weight:

excl. units	28 kg.
incl. units	45 kg.

Type: 5131A
Console part no.: 405131A-THRxx

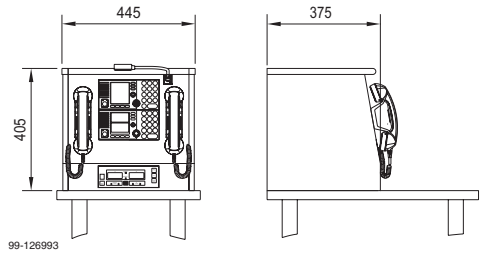

CU51x0 MF/HF Control Unit
RT502x VHF Radio

Weight:

excl. units	15 kg.
incl. units	23 kg.

2.2 Drilling and cutting template

The console can be placed and mounted, in several different ways, to ensure optimal integration into the user environment.

2.2.1 Tabletop mounting for 325mm and 400mm section

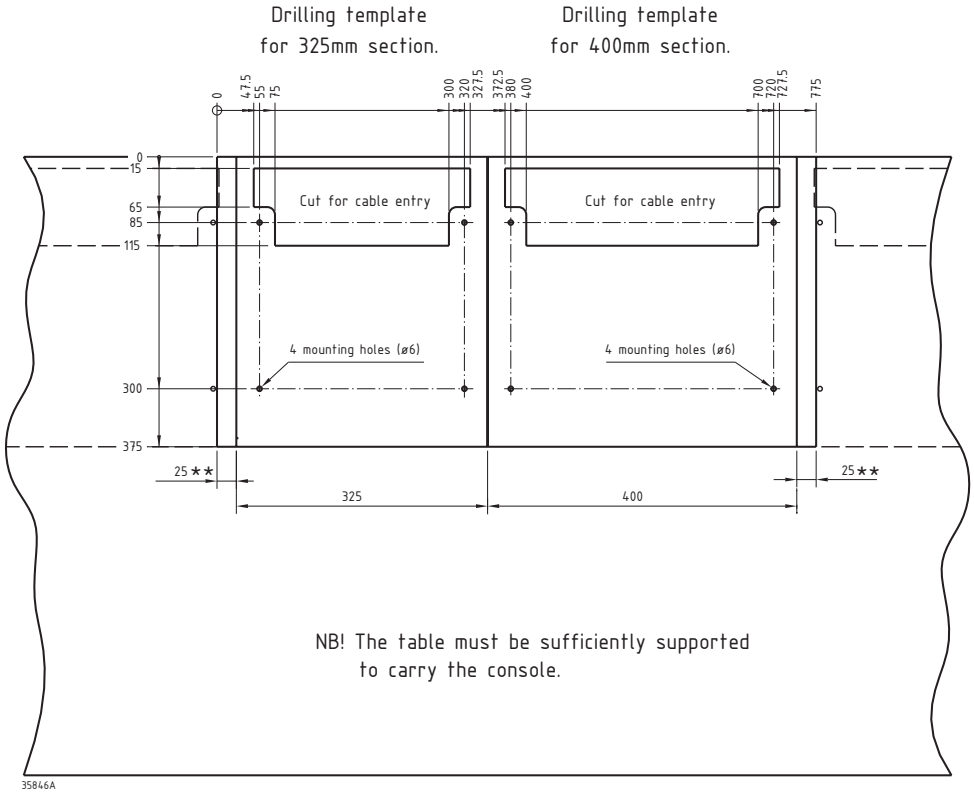

2.2.2 Tabletop mounting for 3 x 400mm section

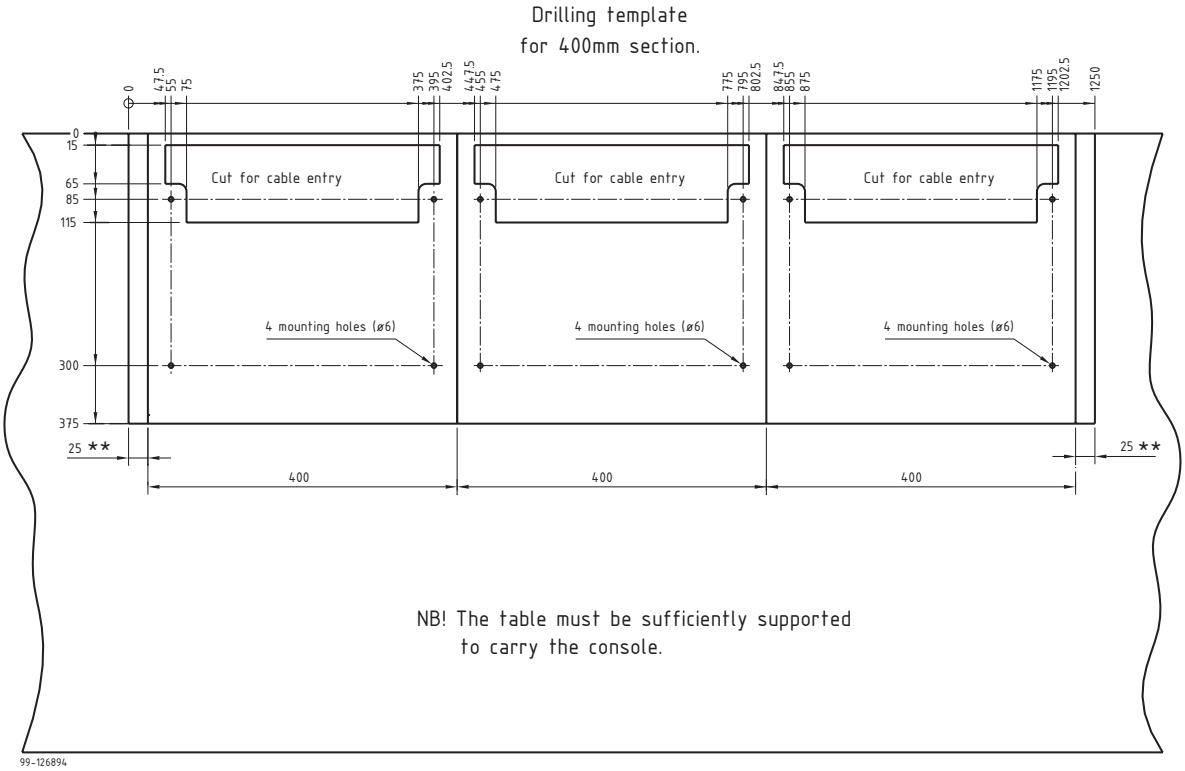

2.2.3 Bulkhead mounting for 325mm and 400mm section

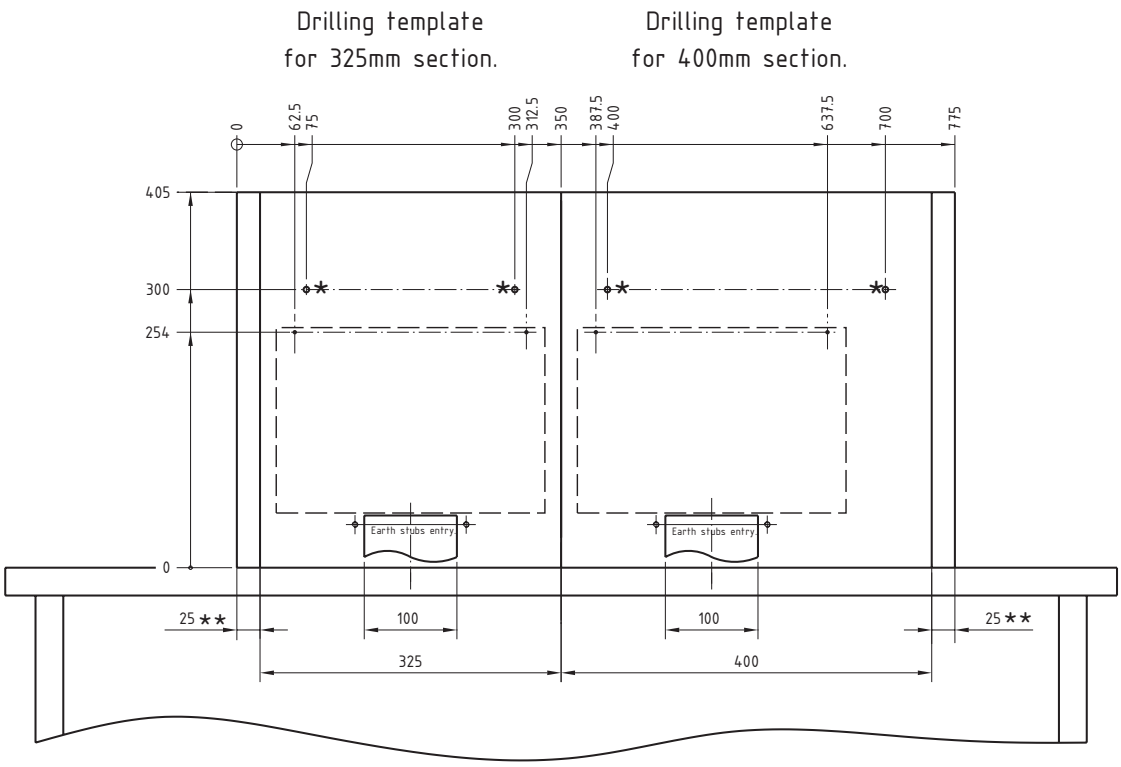

2.2.4 Bulkhead mounting for 3 x 400mm section

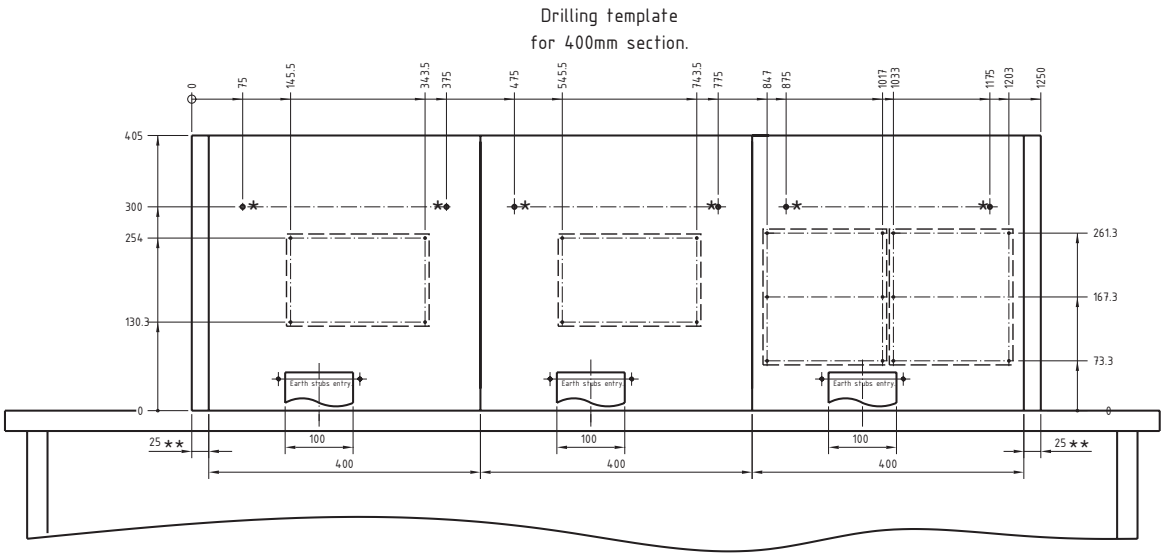

* To avoid vibration noise, the console should be fastened with screws onto the bulkhead.

** Space from last left- and righthand section to wall.
(22.5 + spacing = 25mm)

2.2.5 Earth stubs mounting

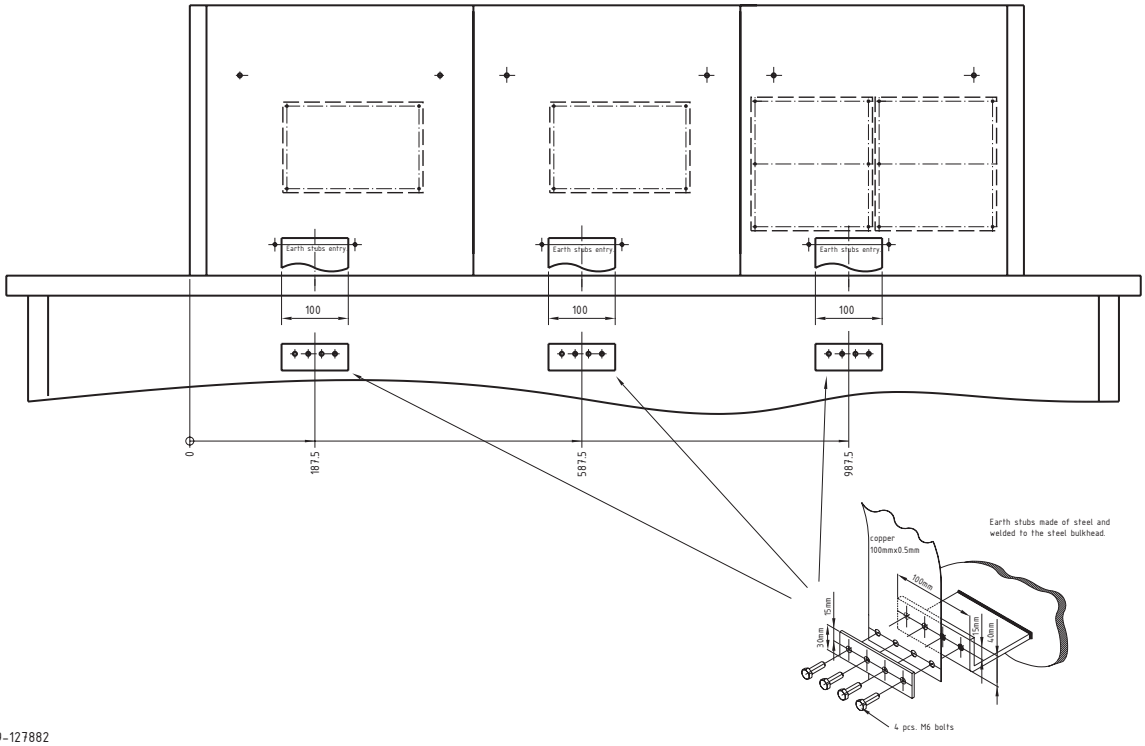

99-127882

2.2.6 Placement of print

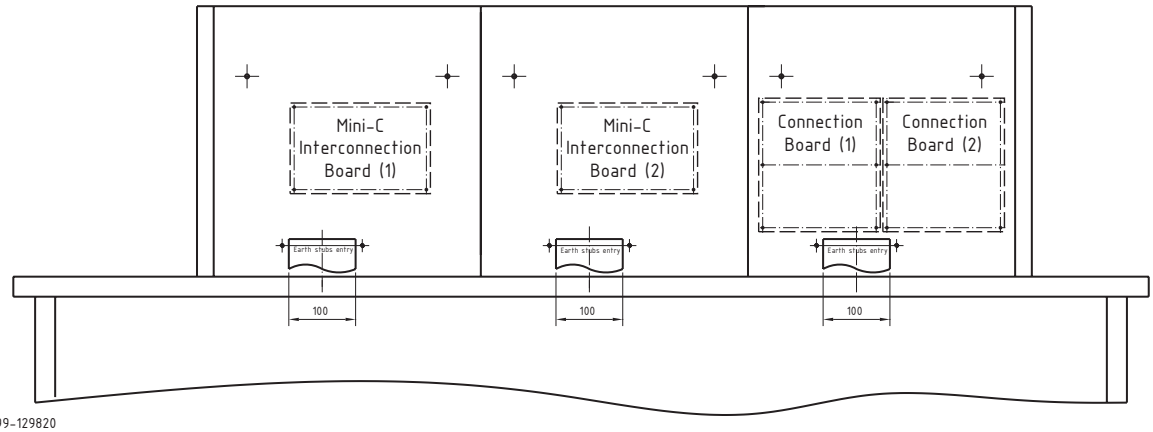

99-129820

2.3 Mounting the console onto the bulkhead

When the console is placed on a table, the back of the console can be attached onto the bulkhead. This allows for free access to the connection board and wiring while installing.

1 Remove the rear (back cover) panels, by removing all 6 screws in each panel. (These will not be needed further and may be discharged of).
2 Remove the edge-profile, from top of the right end of the console (3 screws).
3 Remove the plate on the right end of the console (5 screws).

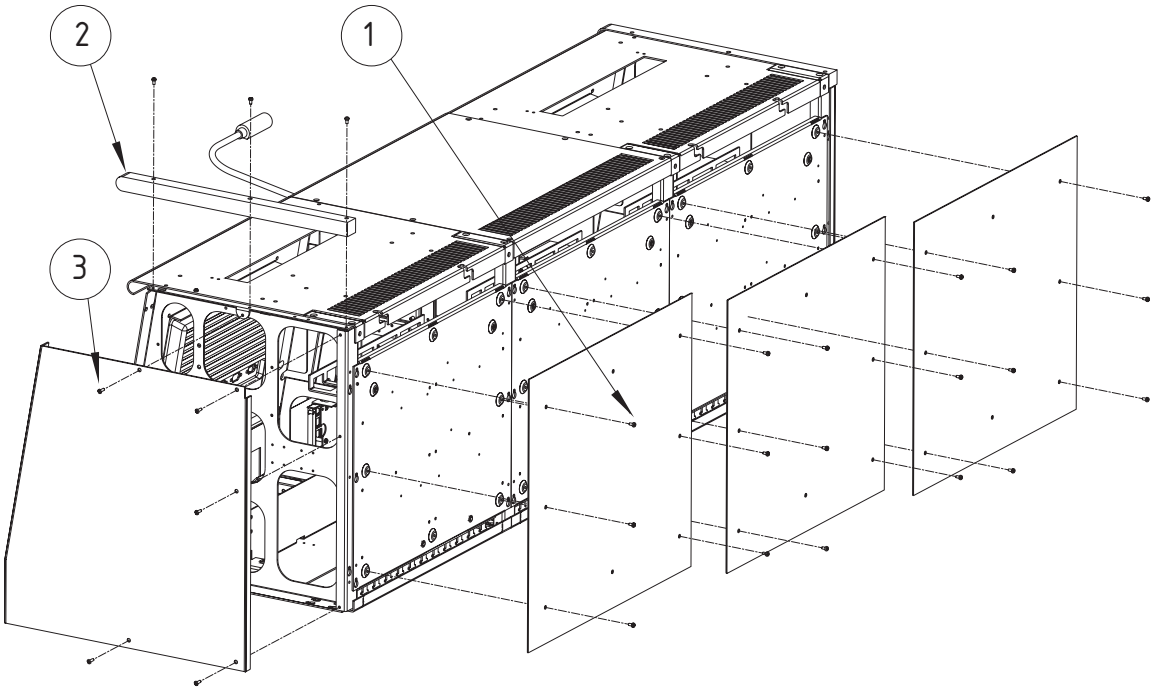

99-126994

4 Remove all key-hole screws from the back.
5 Using a hacksaw, cut away the back part, of the bottom plate, by following the pre-cut lines. Do this on sections, where connection boards are fitted.

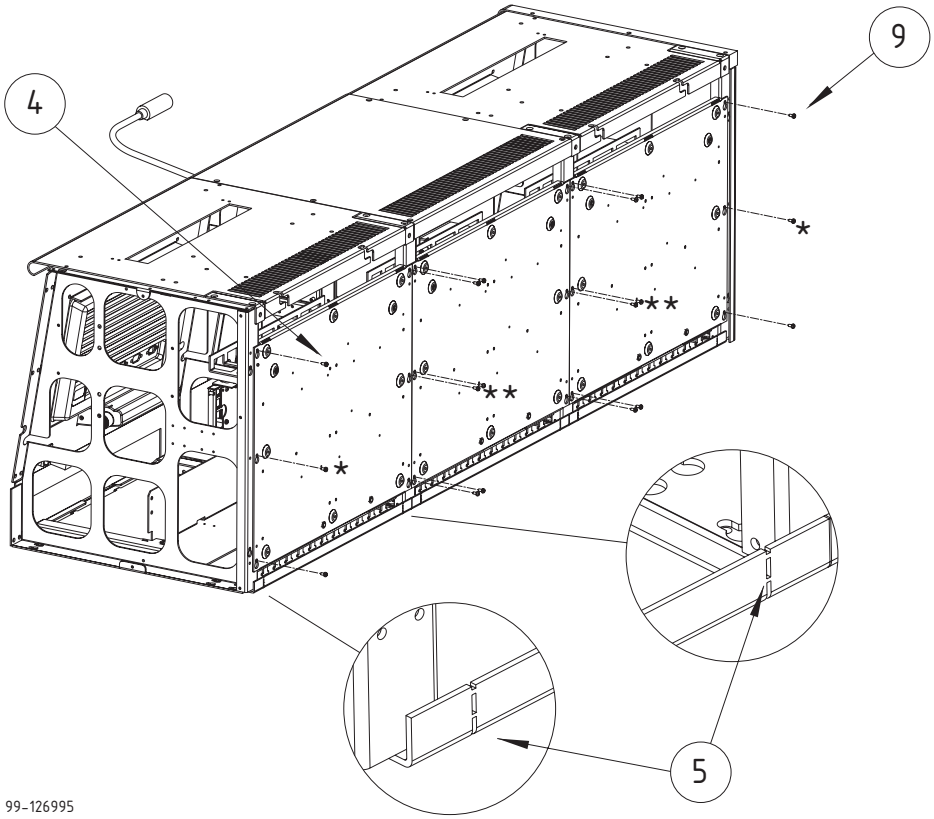

99-126995

6 Mount all key-hole screws, from the inside of the console.

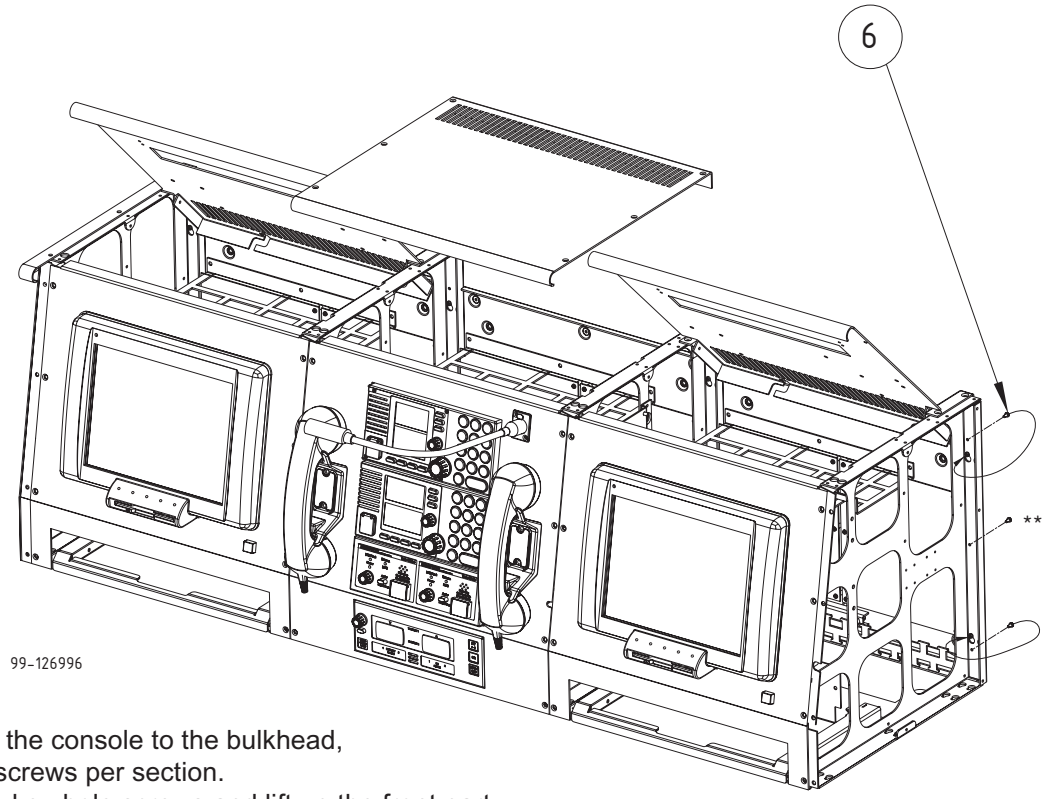

7 Fasten the console to the bulkhead,
with 2 screws per section.

8 Loosen key-hole screws and lift up the front part.

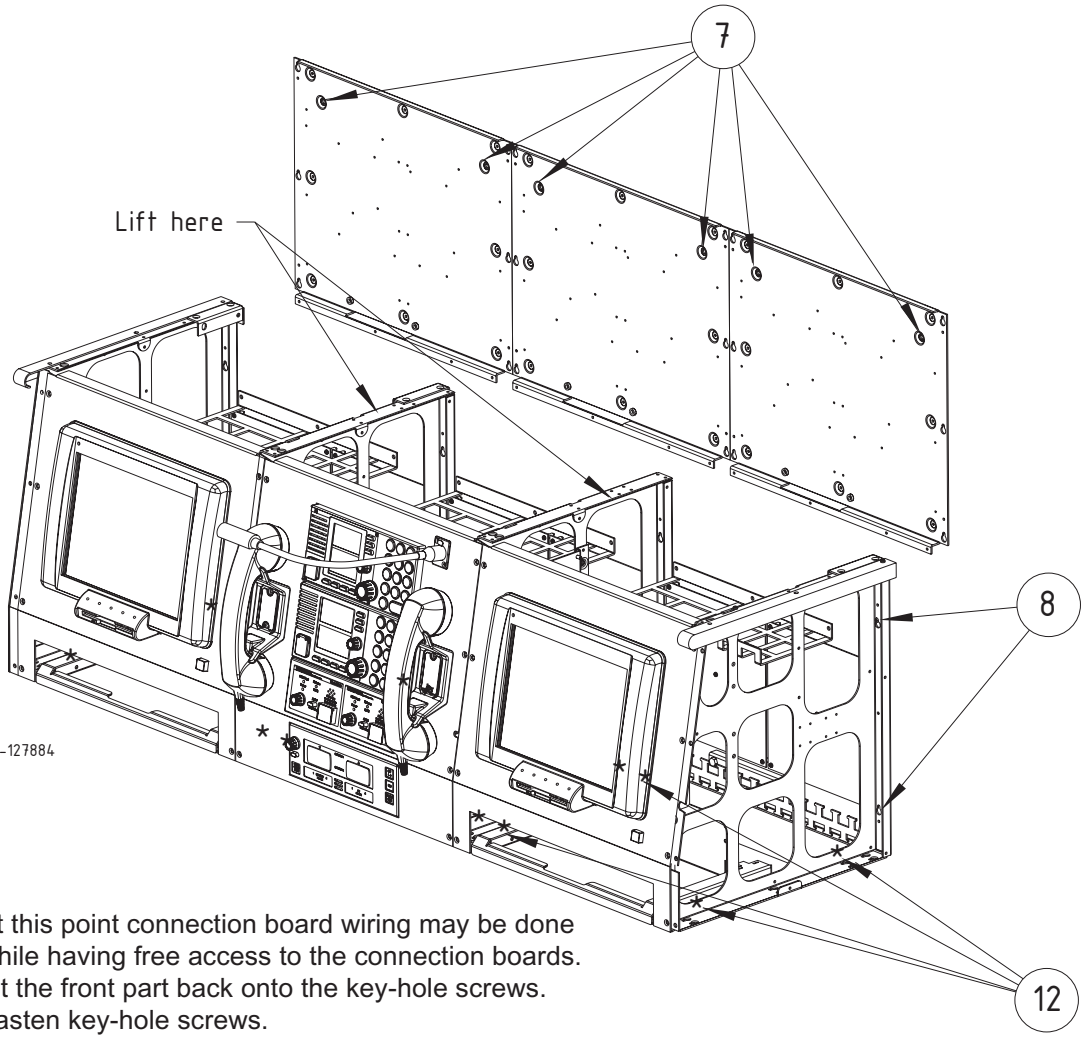

9 At this point connection board wiring may be done
while having free access to the connection boards.

10 Fit the front part back onto the key-hole screws.

11 Fasten key-hole screws.

12 Fasten the console to the table, with four screws per section

13 Reinstall the plate, removed in step 3.

14 Reinstall the edge-profile, removed in step 2.

2.4 Paper roll

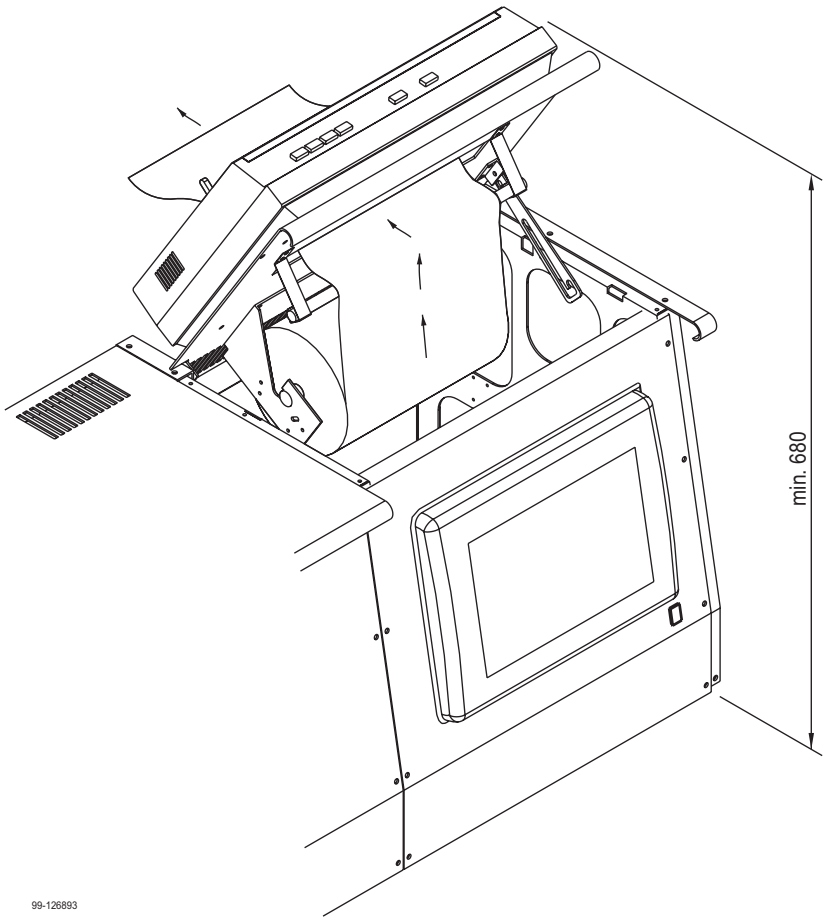

Clearance required above console to open top for access to printer paper roll.

2.5 Control units

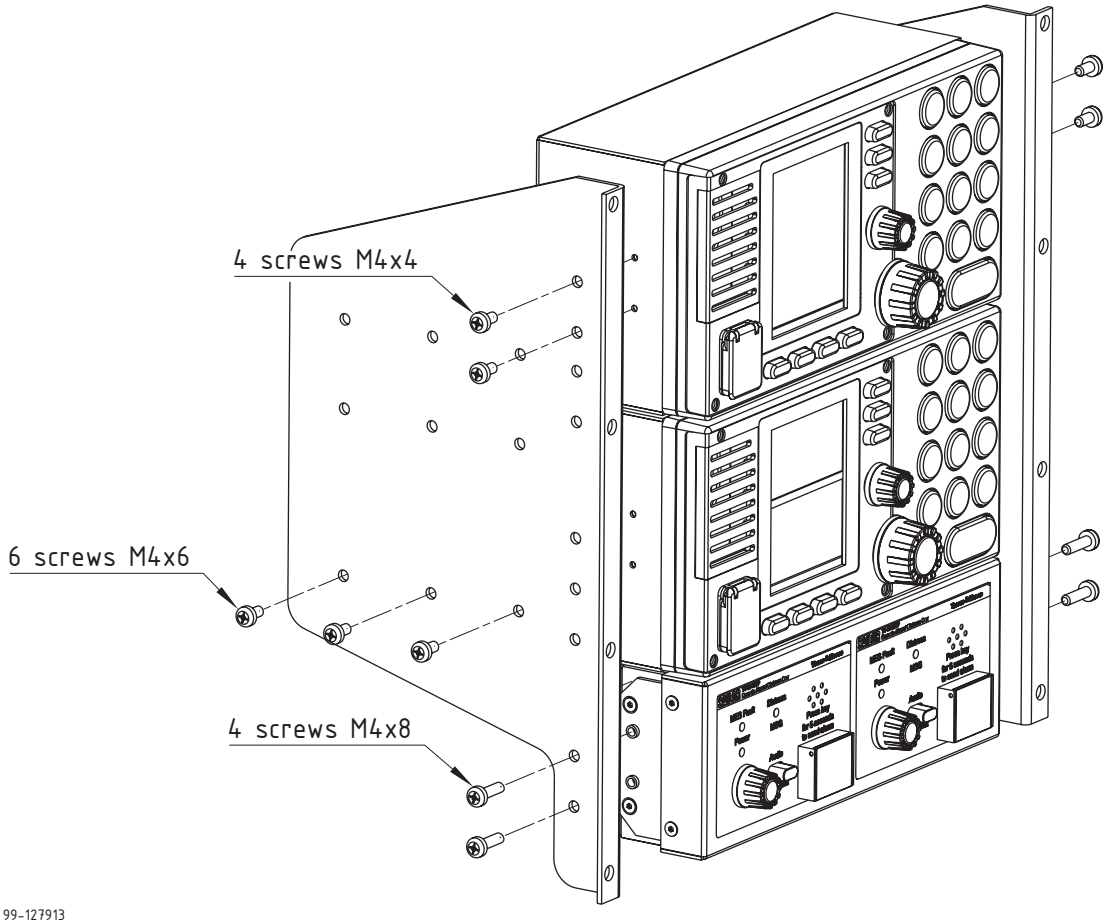

2.6 Message terminal

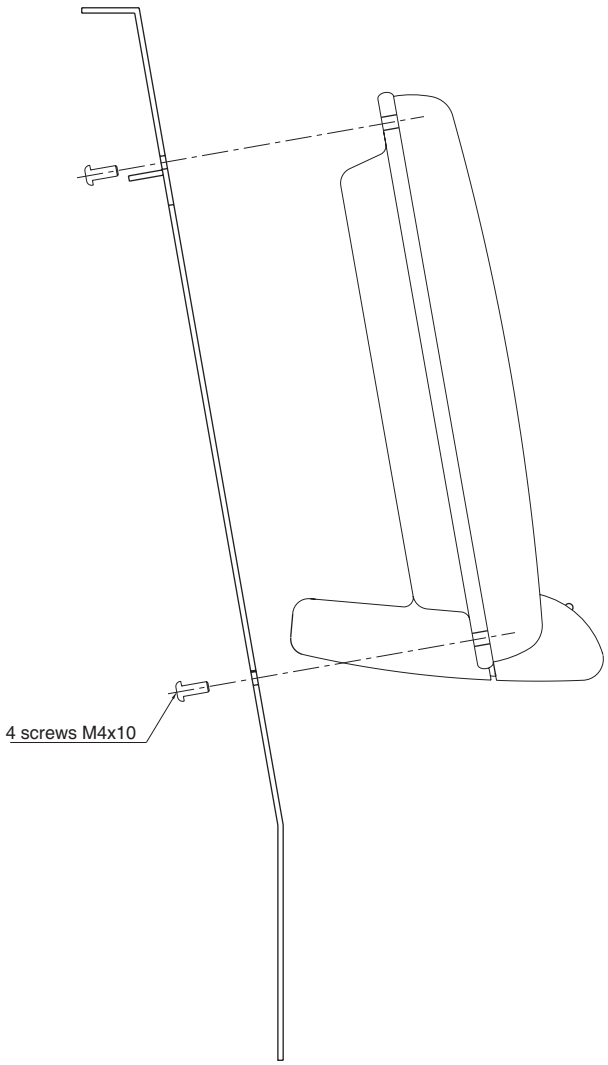

37209B

2.7 Factory configuration of the console

When the System 5000 Console is ordered along with the relevant equipment sets and Service Pack part number (Service Pack denotes factory installation of units in console) the configuration of the equipment will be as per the following notation:

In consoles with two handsets and hence two radio control units, the left side handset is always associated with the upper most control unit (MF/HF CU).
Supplied with the Console accessory kit are self adhesive labels which may be used to mark the respective handsets for MF/HF and VHF, for ease of identification (Fig. 1).

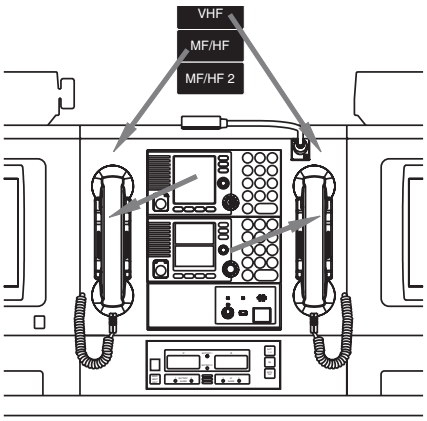

99-128517

Fig.1

Equipment configuration:
With two TT-3000EB mini-C installed (Fig. 2) the printer and Message Terminal/keyboard associated with #1 mini-C (part of primary GMDSS equipment) is installed in the left hand side of the console and the associated mini-C Alarm Panel being the left hand one. The #2 mini-C equipment (part of duplication GMDSS equipment) is installed in the right hand side, the mini-C Alarm Panel being the right hand one. Both Message Terminals will be configured with the Capsat application software program.
The MF/HF controller is installed as the upper most unit (as part of System #1 or primary GMDSS equipment) and the #1 VHF installed below the MF/HF Control Unit also as part of the #1 System or primary GMDSS equipment.

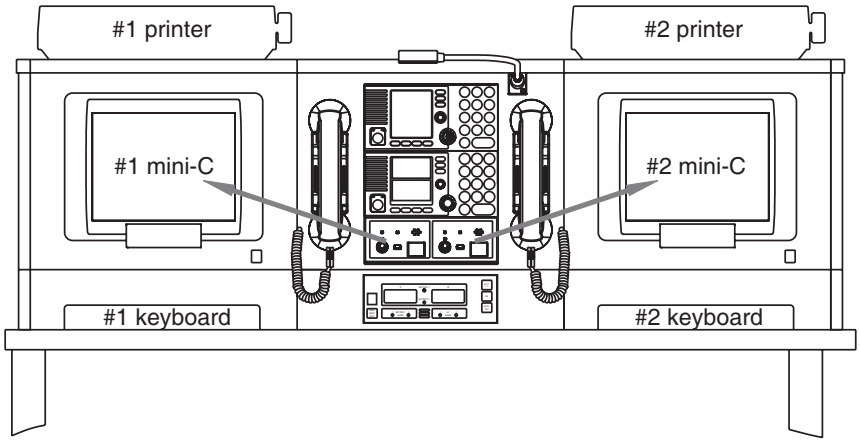

99-128512

Fig.2

With one TT-3000EB mini-C and the full MF/HF Radio Telex installed (Fig. 3) the MF/HF Control unit is installed as the upper most unit being part of System #1 or primary GMDSS equipment with associated Radio Telex Message terminal/keyboard and printer installed in the left hand side of the console. Same notation applies in case of the GMDSS Radio Telex solution without Message Terminal (2-section console - Fig. 4).
The #1 VHF is installed below the MF/HF Control Unit as part of the #1 System or primary GMDSS equipment.
The TT-3000EB mini-C is installed in the right hand side of the console being part of System #2 or duplication GMDSS equipment. In the case of two Message Terminals (Fig. 3) these are configured with the Radio Telex application software program and the Capsat application software program respectively.

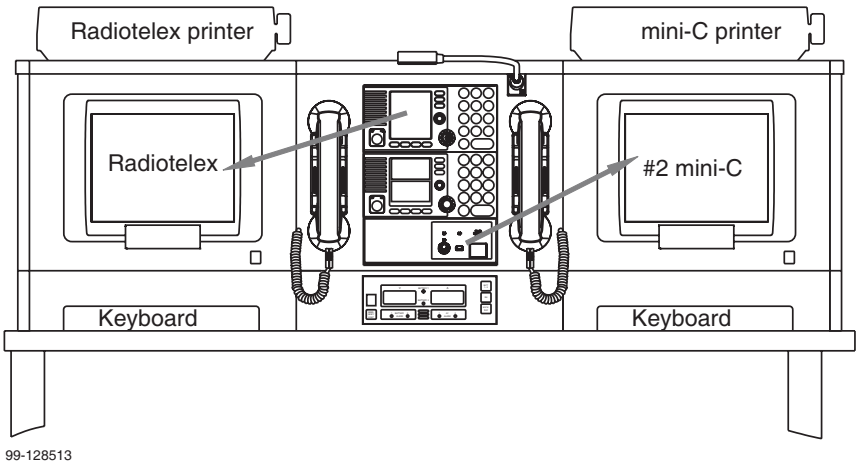

Fig. 3

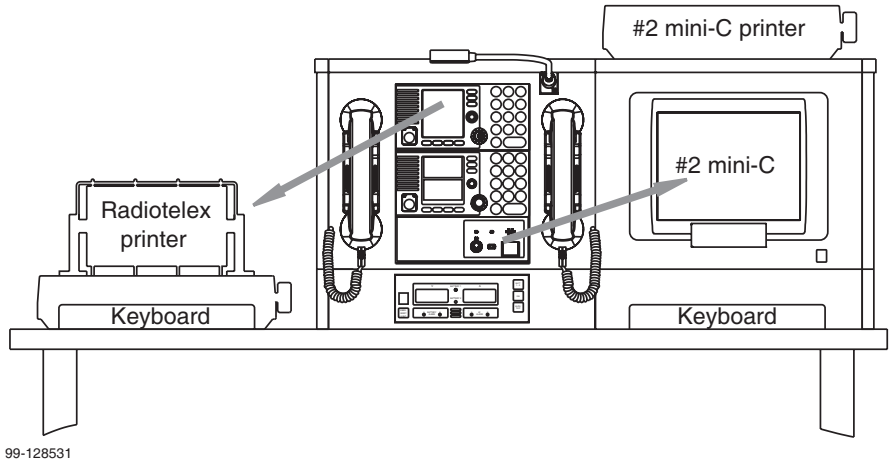

Fig. 4

3 Electrical installation

3.1 TT-3606E opt. 003 NMEA Adapter for mini-C

In case the position information generated by the build in GPS receiver of the TT-3026C mini-C Transceiver is required for feeding to other external communication equipment like VHF radios etc., the TT-3606E Opt. 003 NMEA Adapter is required to adapt the information into proper NMEA signal levels.

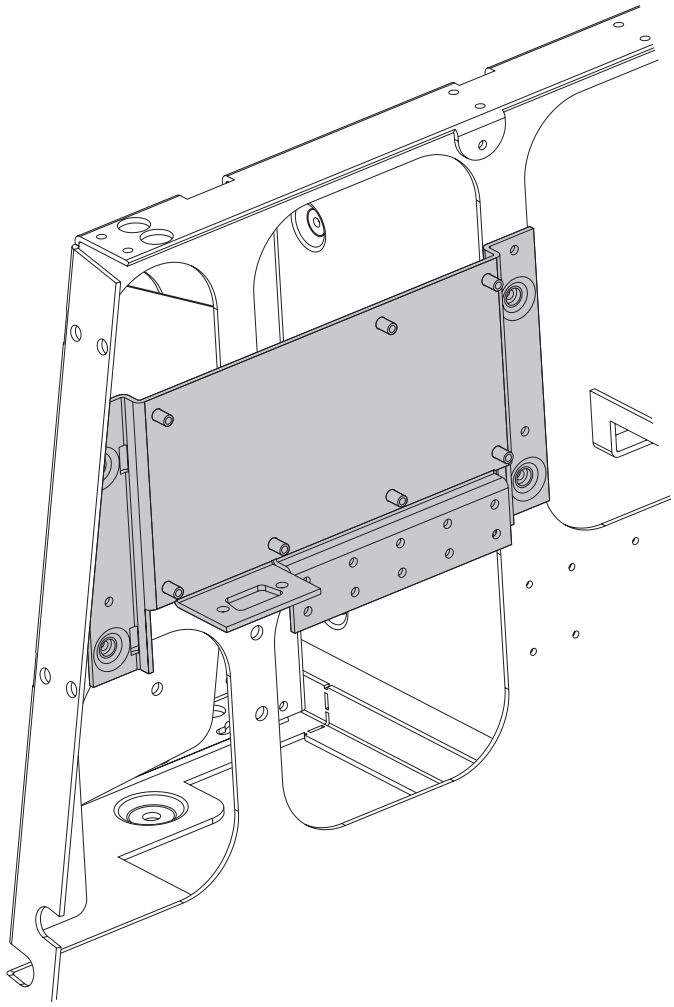

99-127912

When installing the TT-3606E Opt. 003 NMEA Adapter in the console, the cover of the Adapter box may be discarded of.

Please refer to the installation manual delivered with the TT-3606E Opt. 003 NMEA Adapter for further installation information (TT 98-124401). Manual is also available for download from the T&T Extranet/ eSupport download area.

3.2 Grounding cables

Grounding of all external cable screens to the console is important in order to reduce risc of noise and interference in the GMDSS installation.

The screen of each external cable must be properly terminated to the support bracket by means of a cable lug properly secured to the support bracket with a screw.

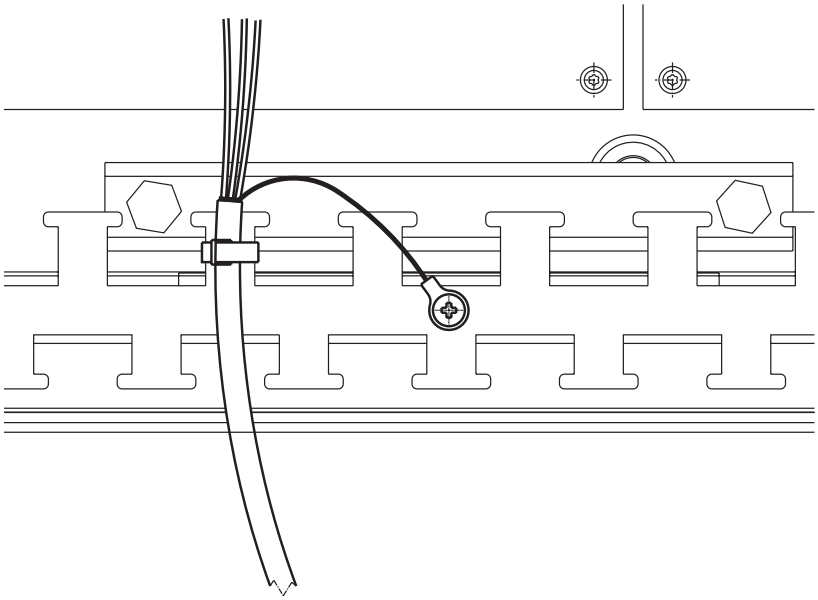

99-127906

All internal cable screens are grounded to the support bracket using tie wraps.

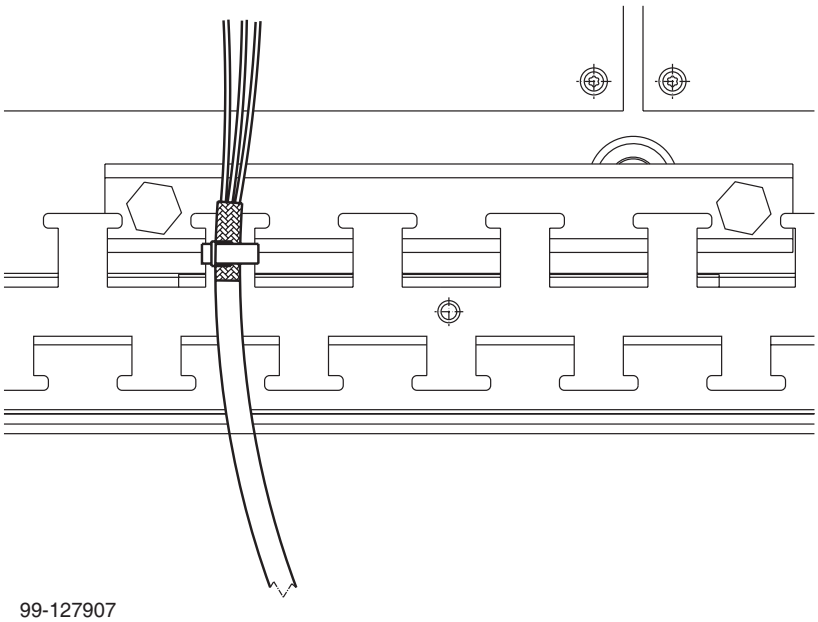

99-127907

3.3 Console light

Functional description
The intention is to supply the console workplace, with sufficient ambient light for working. If desired, the light can be turned off completely, so that it does not distract the ship operator, for example during night time. However when required the light can be turned on quickly, by means of a switch.

By turning the dimming potentiometer clockwise, the light intensity increases, and correspondingly turning the potentiometer anti clockwise decreases the light intensity.

The light can be switched on or off, by pushing the to-way switch located just below the dimming potentiometer.

If an external two-way light switch is installed for remote control of this console light, this switch should be connected to the appropriate terminals on the primary connection board.

The gooseneck lamp is fed by a regulated DC voltage. The max. voltage supplied to the gooseneck lamp is around above 12VDC.

The gooseneck lamp comprise a 3 pin XLR-plug with a release button. Pin 2 carries positive supply voltage (+), pin 3 is connected to DC-. Pin 1 is not connected.

The supply for the dimming module is routed from the emergency batteries, through the connection board.

The light source is either by white LED´s or red LED´s. The use of LED´s greatly reduces current consumption and heat dissipation normally associated with incandescent lamps.

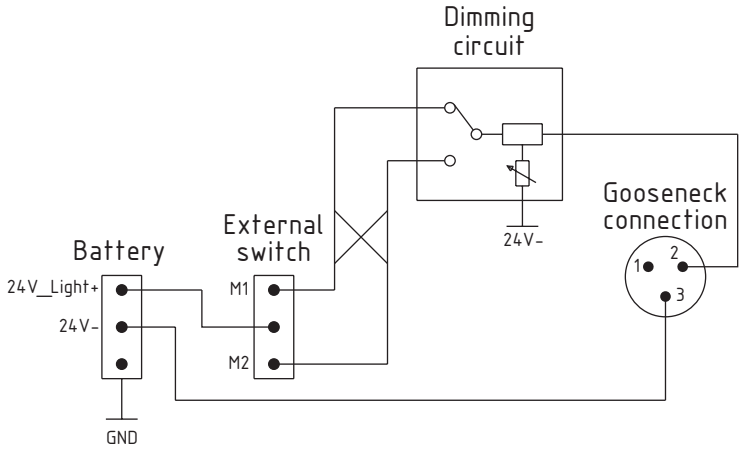

If an external switch is not installed, a jumper wire should be placed between "24V_Light+" and "M1".

99-126892

3.4 Connection board

The connection board has been designed, so that connectors are grouped in relation to products.

Each connector has been given a unique name and designator in order to clearly identify the connector. Also where the wires are mounted into terminal strips, each connection has been named. The first digit of a designator, is a consecutive number, and the second digit is a digit only used for connections belonging to that group. Every designator starts with an „X“, to indicate that this is a type of connector. For example, the first connector for VHF connection carries the designator „X21“, the second connector „X22“ and so on.

The only connector that differs from the above description, is the connector „Remote“, also designated „X71“. This connector joins the remote function for both „MINI-C“ and „TELEX“.

In consoles with two connection boards, the primary equipment connects to the left connection board. The duplication equipment connects to the right connection board. This means that for example in communications systems with two VHF radios, the primary VHF is the one located in the console and connects to the left connection board. The duplication VHF will, if connected through the console connect, to the right hand side connection board.

Component location connection board

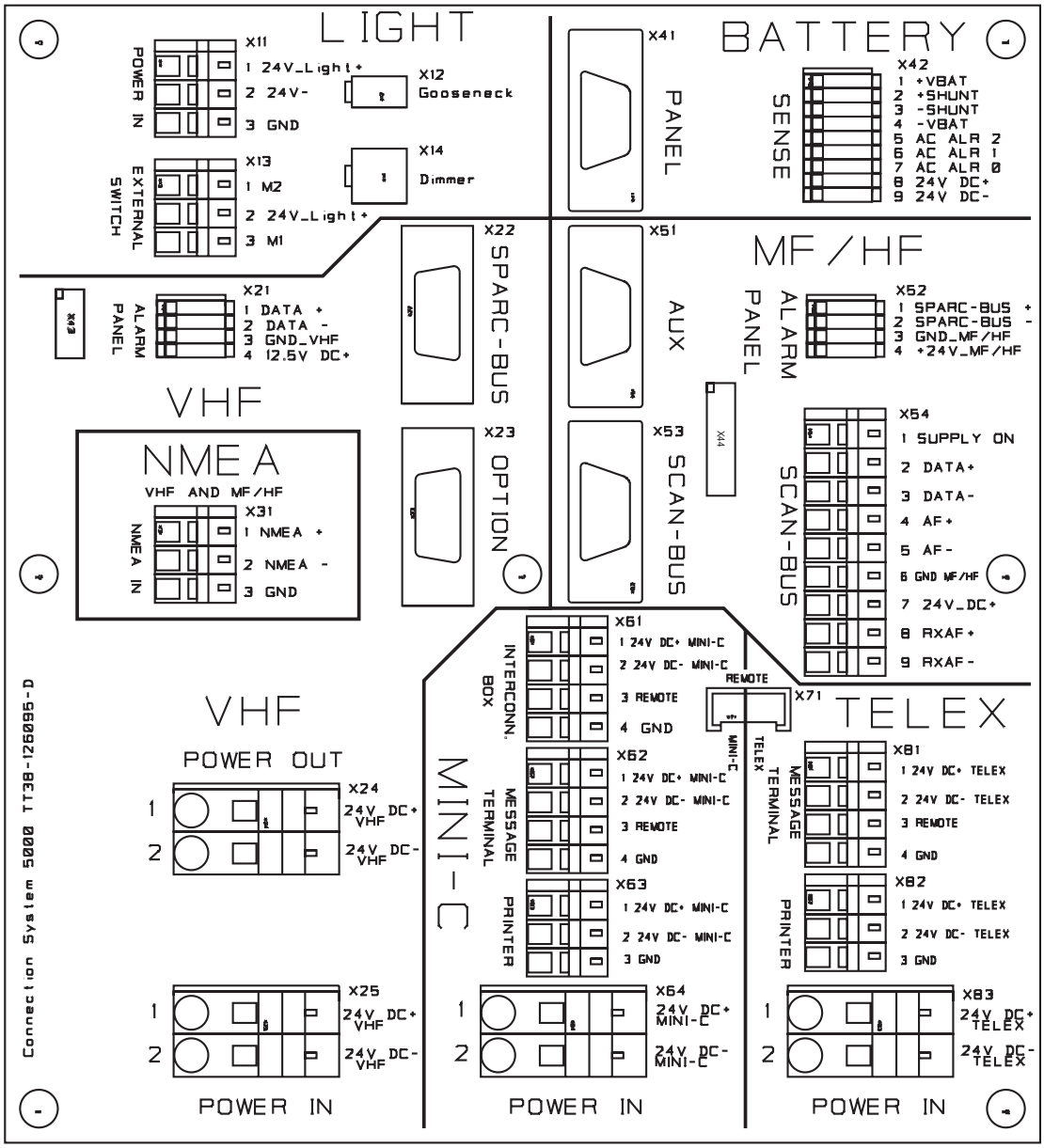

3.5 Schematic connection board

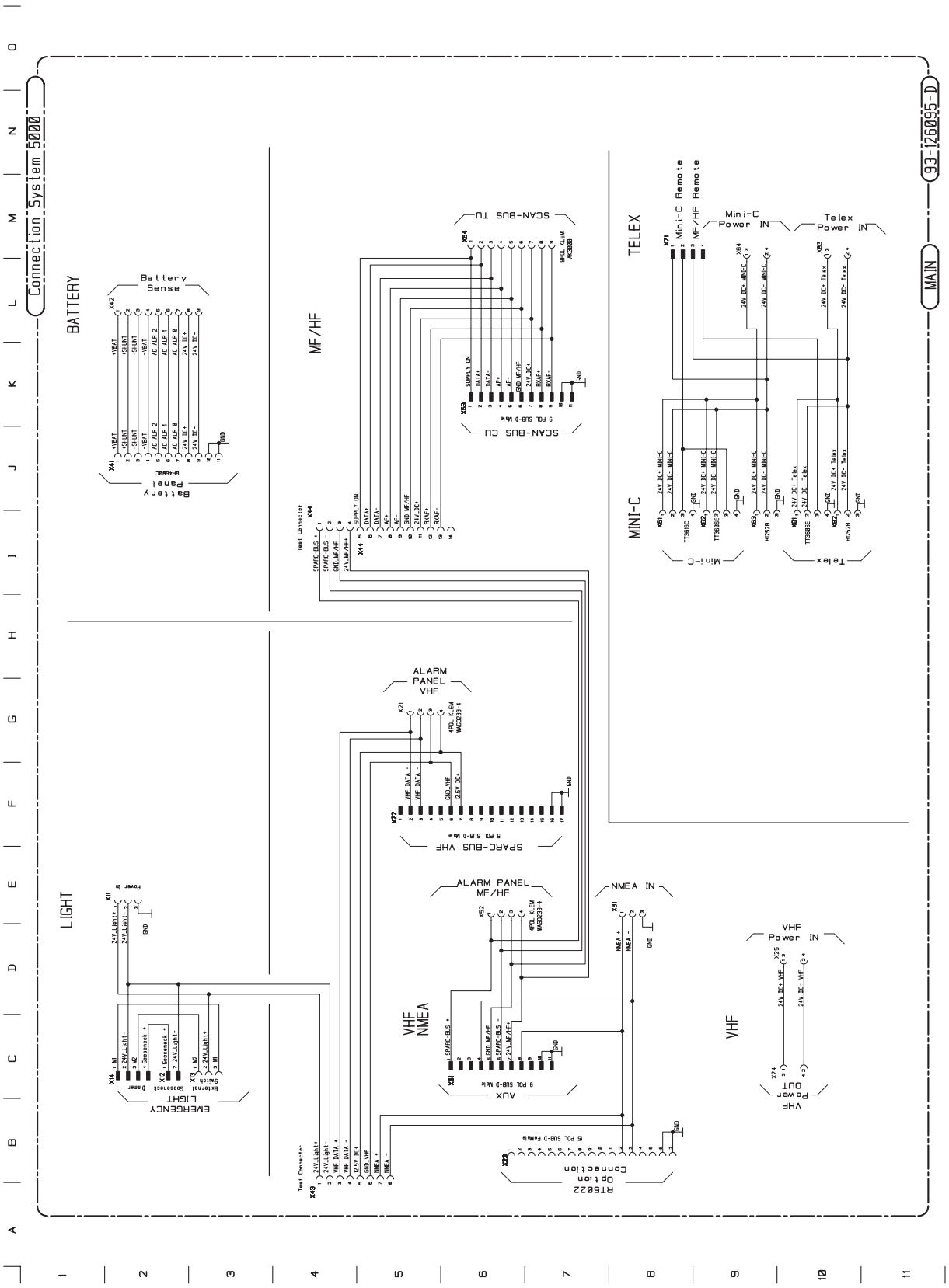

4 Installation cables

4.1 Console wiring system

The internal wiring of the console has been grouped and numbered in the following drawings, so that each cable is easily identified by its unique identifier.

Numbering

The numbering is grouped in three digits, as indicated below. The type of signal carried is also indicated in the table listing the internal cables.

X.Y.ZZ

C7 = Primary internal
C8 = Duplication, backup, internal
C9 = Common internal

1 = RF/Antenna
2 = Signals
3 = DC power
4 = AC power

X.2.00 through 19 = Control/Data
X.2.20 through 29 = Relay output
X.2.30 through 39 = Ext. signal
X.3.00 through 09 = Heavy duty DC (distribution)
X.3.10 through 19 = Single power

4.2 Internal cables overview

Cable No.	*Cable type*	*From/To*	*From/To*	*Part No.*	*Signal*	*Conn.*
C7.1.00	PL-PL	RT50xx	RF-Plug	527830	VHF Main RF	1:1
C7.1.01	PL-PL	RT50xx	RF-Plug	527830	VHF DSC RF	1:1
C7.2.00	9-9 pole Sub D	CU51x0 MF/HF		56.123	AUX	1:1
C7.2.01	9-9 pole Sub D	CU51x0 MF/HF		56.123	SCAN-BUS	1:1
C7.2.02	Centronics 25 pole	Data Terminal/CU	Printer	Supplied	Message	1:1
C7.2.03	2 pole	mini-C Remote		56.121	On/Off	2
C7.2.04	9-9 pole Sub D	Data Terminal	TT-3616C	Supplied	Data	1:1
C7.2.05	Multi Cable	TT-3616C	TT-3043CP-2	37-122732-A	Data	3
C7.2.06	15-15 pole Sub D	RT50xx		37-126527	Option	8
C7.2.07	15-15 pole Sub D	RT50xx		37-126528	SPARC-II	9
C7.2.12	8 pole mini din	Printer	Paper switch	56.122	Control	4
C7.2.14	9-9 pole Sub D	Data Terminal	CU51x0 MF/HF	Supplied	Data	1:1
C7.3.10	Power Cable	Printer		Supplied	DC supply	M
C7.3.11	Power Cable	Data Terminal		Supplied	DC supply	M
C7.3.12	Power Cable	TT-3616C		37-123214-B	DC supply	5
C7.3.13	Power Cable	RT50xx		Supplied	DC supply	M
C8.1.00	PL-PL	RT50xx	RF-Plug	527830	VHF Main RF	1:1
C8.1.01	PL-PL	RT50xx	RF-Plug	527830	VHF DSC RF	1-1
C8.2.00	15-15 pole Sub D	RT50xx		37-126527	Option	8
C8.2.01	15-15 pole Sub D	RT50xx		37-126528	SPARC-II	9
C8.2.02	Centronics 25 pole	Data Terminal	Printer	Supplied	Message	1:1
C8.2.03	9-9 pole Sub D	Data Terminal	TT-3616C	Supplied	Data	1:1
C8.2.04	Multi Cable	TT-3616C	TT-3043CP-2	37-122732-A	Data	3
C8.2.05	2 pole	mini-C Remote		56.121	On/Off	2
C8.2.06	8 pole mini din	Printer	Paper switch	56.122	Control	4
C8.3.10	Power Cable	RT50xx		Supplied	DC supply	M
C8.3.11	Power Cable	Printer		Supplied	DC supply	M
C8.3.12	Power Cable	Data Terminal		Supplied	DC supply	M
C8.3.13	Power Cable	TT-3616C		37-123214-B	DC supply	5
C9.2.01	9-9 pole Sub D	Battery Panel		56.123	Batt Sense	1:1
C9.2.02	9-9 pole Sub D	Battery Panel		56.123	Batt Sense	1:1
C9.3.10	Cable, 2 pole	Emg. light/gooseneck		37-126773	DC supply	6
C9.3.11	Cable, 4 pole	Emg. light-dimmer		37-126772	DC supply	7

Notes:

- Where „From/To“ is left blank, the cable is terminated at the connection board 59-126095. See relevant internal wiring diagrams, for further information.

- „Supplied“ = Designates cable that is supplied with a product, and therefore does not have its own part number.

- M = Consult the technical manual for the product.

- Where „Conn.“ is marked with „1:1“, this means that the cable ends are wired pin number 1 to pin number 1, pin number 2 to pin number 2, and so on for further pin numbers.
  Other markings at „Conn.“, refers to cable wiring connection drawings, at the following pages.

2: mini-C Remote, 2 pole:
The two wires are soldered on to two terminals, on an on/off push-button switch.

3: Multi cable, TT3043CP-2:

TT-3616C	TT-3043CP-2
+9VDC, White	Pin 1
GND, Brown	Pin 2
I/O 0, Red	Pin 3
I/O 1, Gray	Pin 4
I/O 2, Yellow	Pin 5
I/O 3, Green	Pin 6
I 4, Blue	Pin 7
I 5, Pink	Pin 8
	Pin 9, Not connected
	Pin 10, Not connected
	Pin 11, Not connected
	Pin 12, Not connected

Please refer to the installation manual delivered with the TT-3000EB mini-C GMDSS system for further installation information (TT 98-122414).

4: mini din, paper switch:
The two conductors are soldered respectively to pin 1 and pin 2, of the paper switch.
Screen is soldered to the bracket for the paper switch.

5: Power cable, TT-3616C:

Connection board	TT-3616C
Pin 1, +24V, Red	DC +
Pin 2, -24V, Black	DC -
Pin 3, Remote, White	Remote On/Off

6: Cable, 2 pole, Emg. light/gooseneck lamp:

Connection board	Gooseneck lamp
Pin 1 Gooseneck +	Pin 2, Light supply
Pin 2 - Light	Pin 3, Light ref.

7: Cable, 4 pole, Emg. light-dimmer:

Dimmer	Connection board
Pin 1	Pin 2, - Light
Pin 2	Pin 1, M1
Pin 3	Pin 3, M2
Pin 4	Pin 4, Gooseneck +

8: Option, 15 pole SUB D connector:
Only wire numbers 12, 13 and the screen, is fed through this cable.
All other pin numbers has no connection.

9: SPARC-II, 15 pole SUB D connector:
Only wire numbers 2, 3, 6, 7 and the screen, is fed through this cable.
All other pin numbers has no connection.

4.2.1 Internal cables 2 section console w/ MF/HF Radiotelex, mini-C and VHF

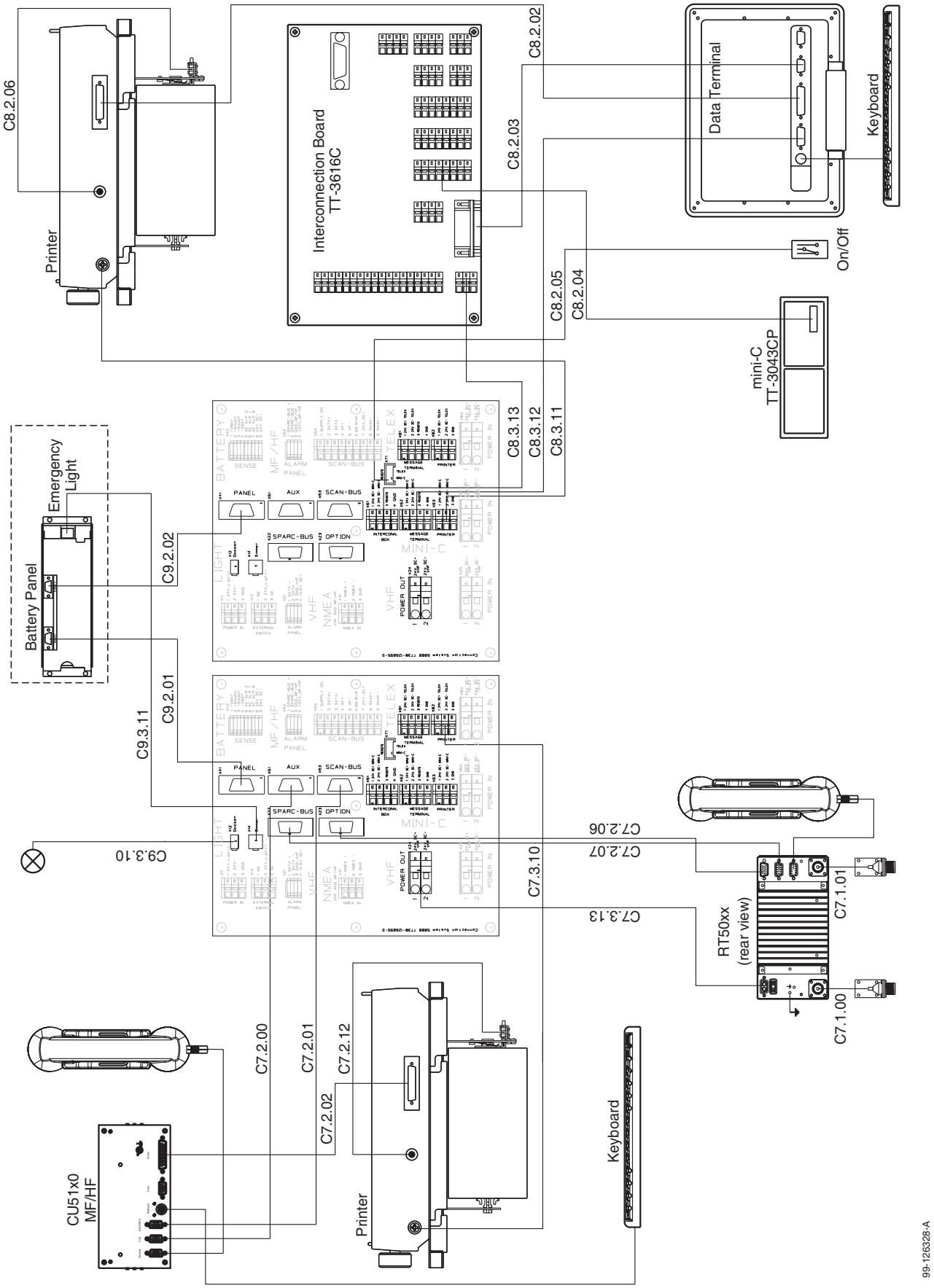

4.2.2 Internal cables 3 section console w/ MF/HF Radiotelex, mini-C and VHF

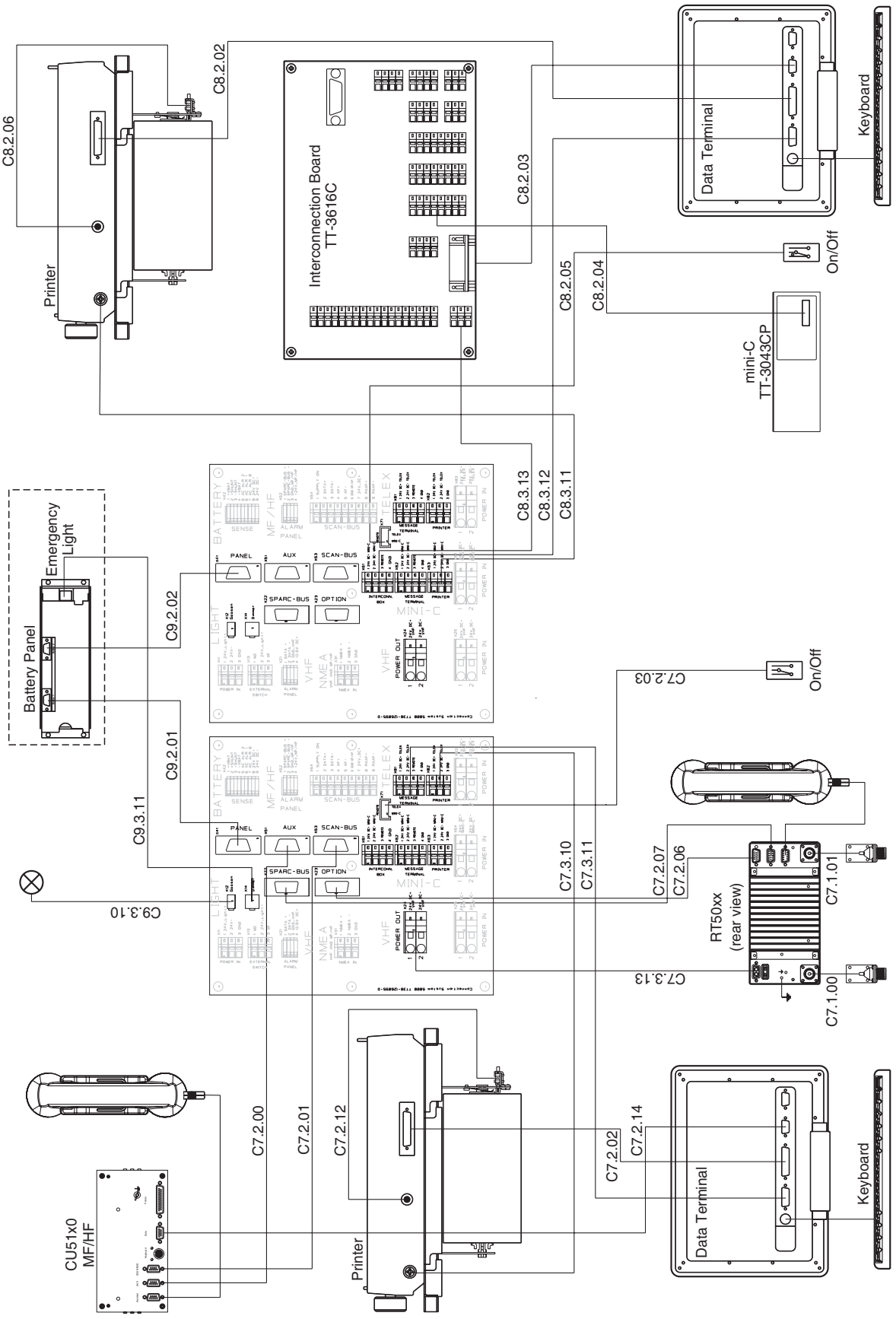

4.2.3 Internal cables 3 section console w/ MF/HF, 2 x mini-C and VHF

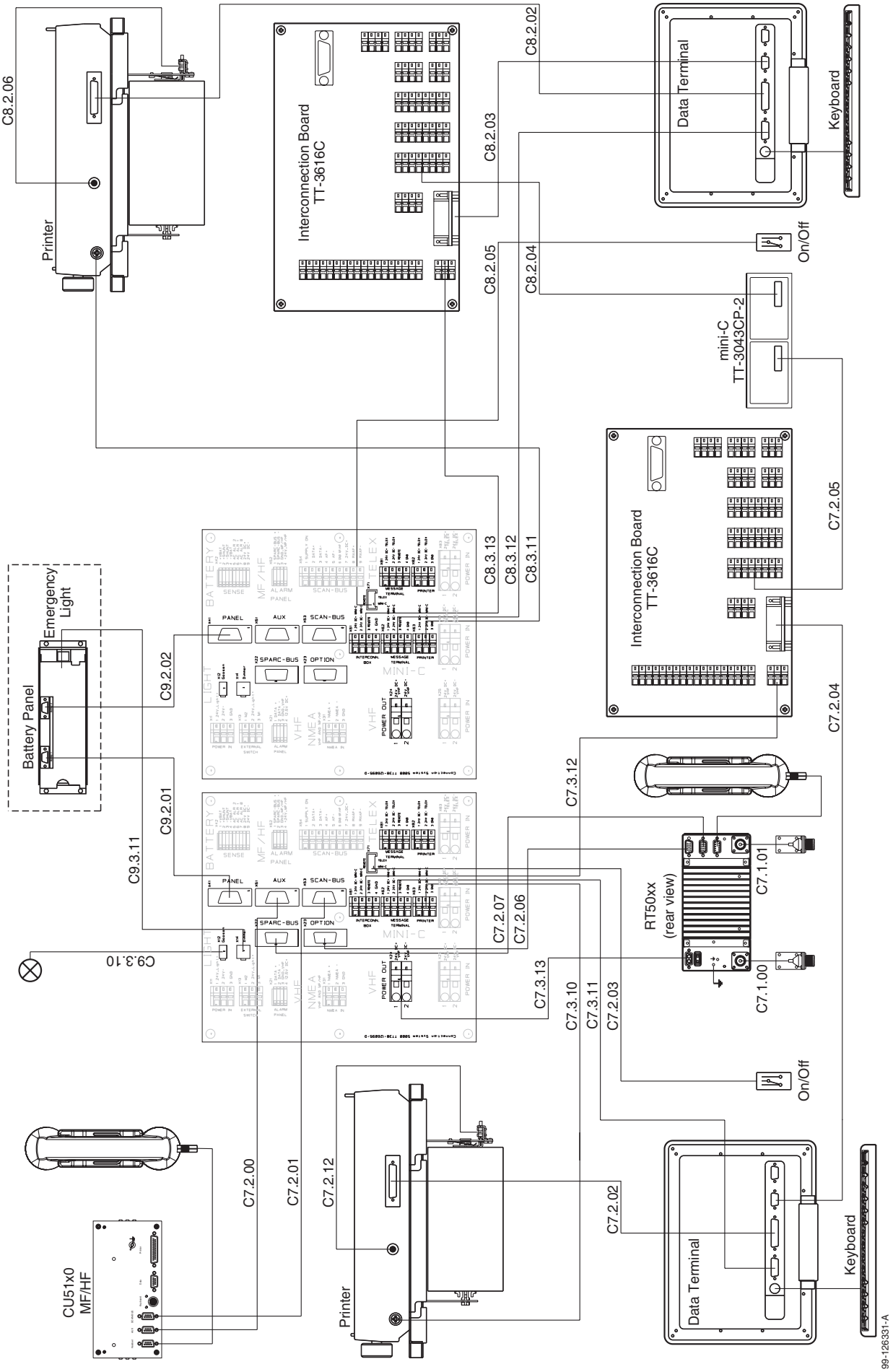

4.2.4 Internal cables 1 section console w/ MF/HF and VHF

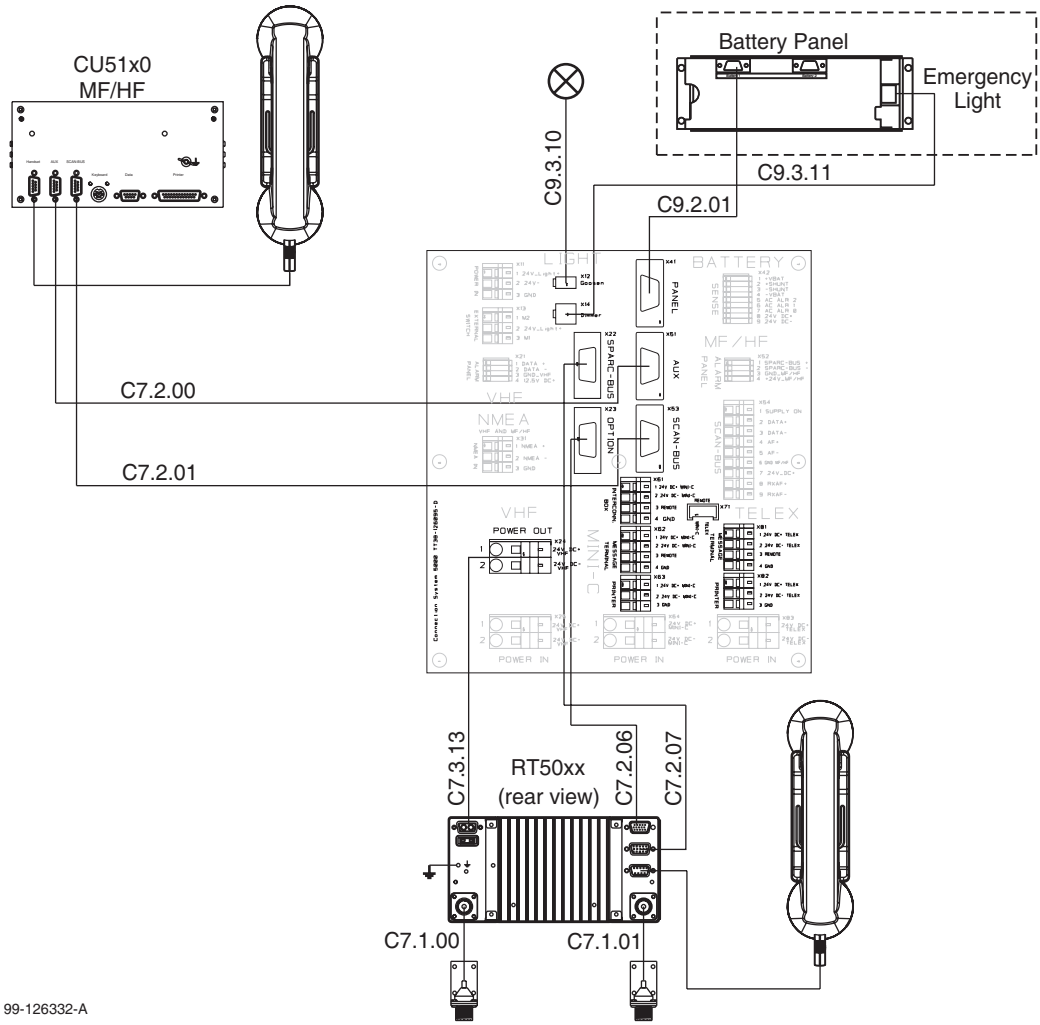

4.3 Installation external cabling

4.3.1 External cabling - Emergency light, Battery Panel and position source

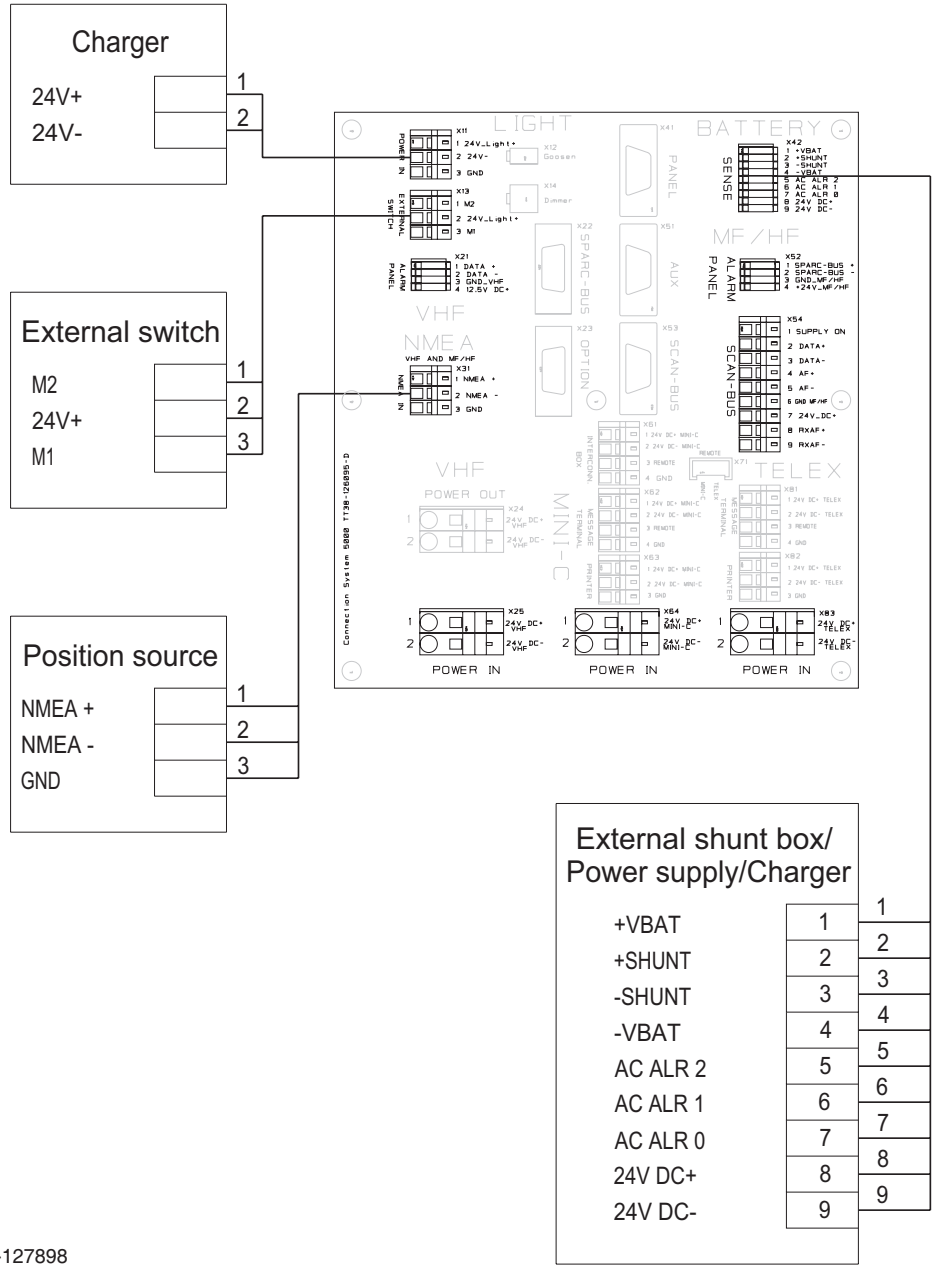

99-127898

4.3.2 External cabling - Alarm Panel

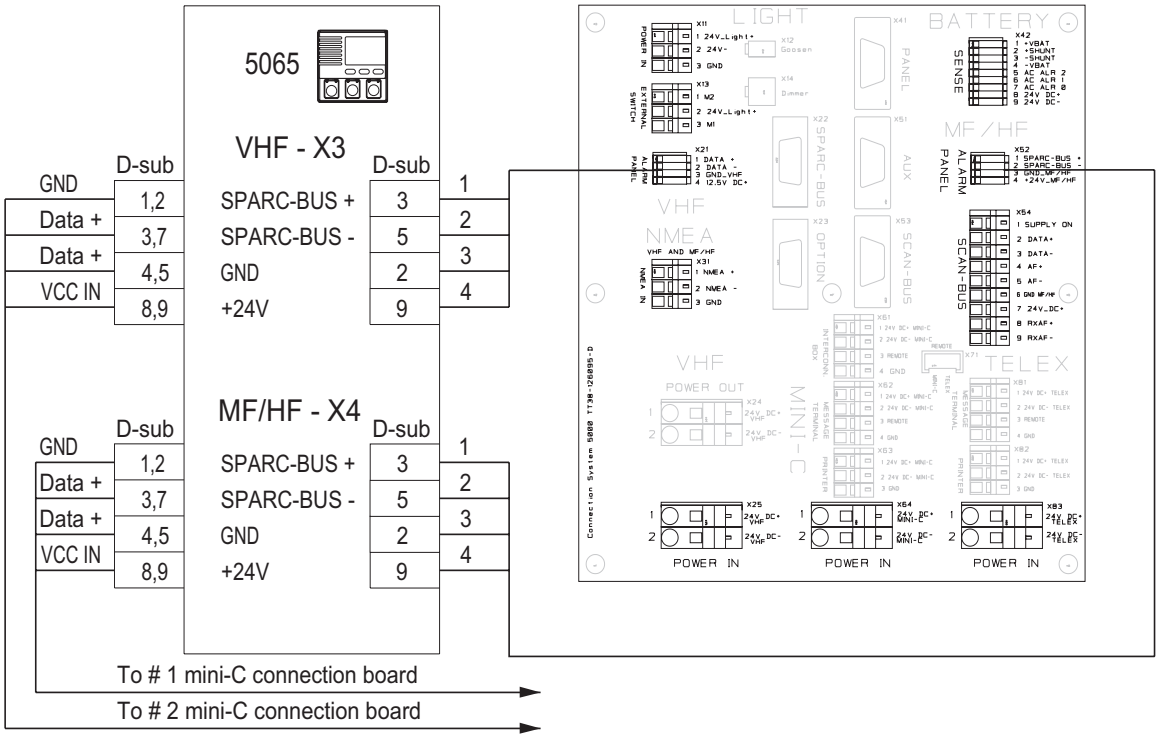

99-127899

4.3.3 External cabling - VHF

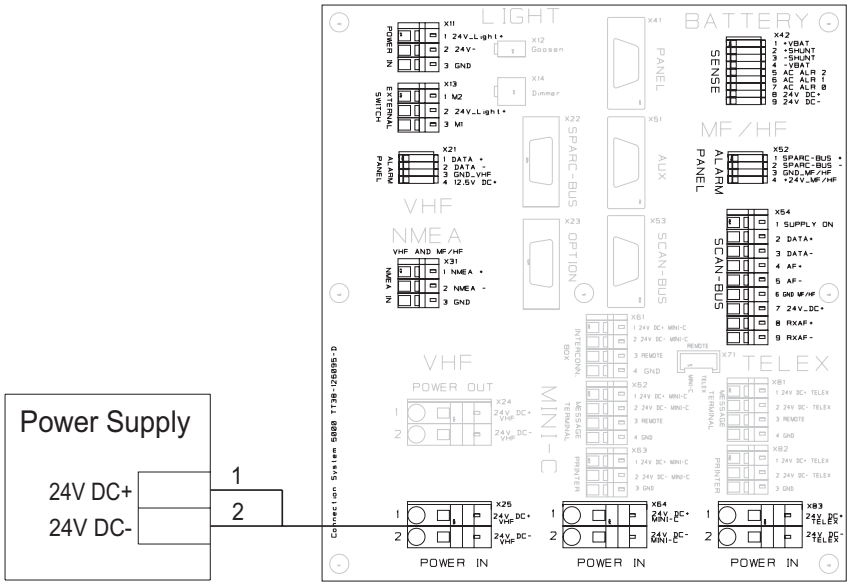

99-127900

4.3.4 External cabling - MF/HF

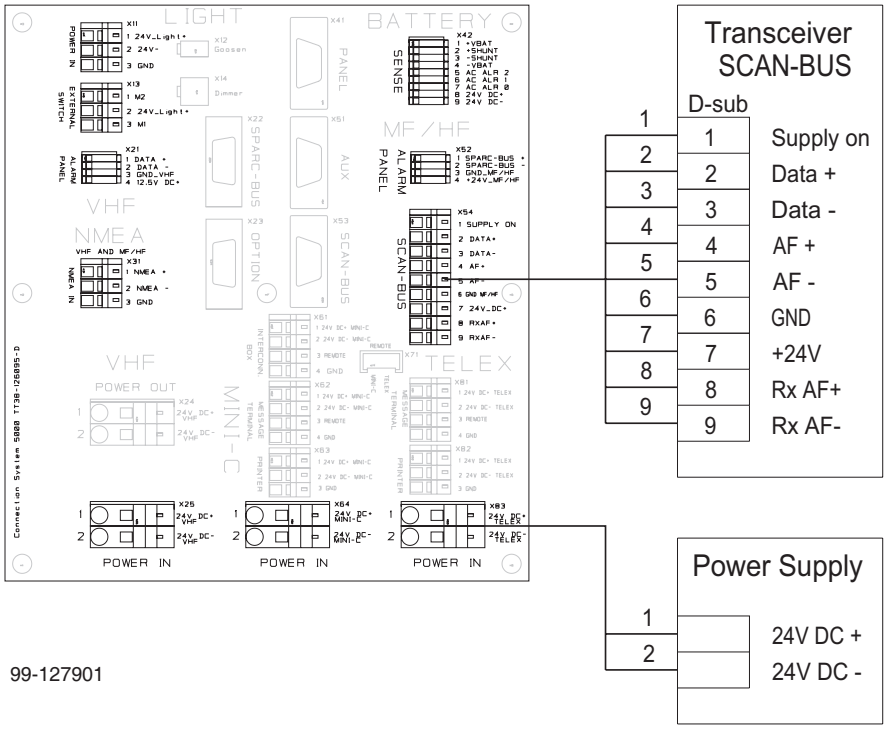

4.3.5 External cabling - mini-C and Power supply

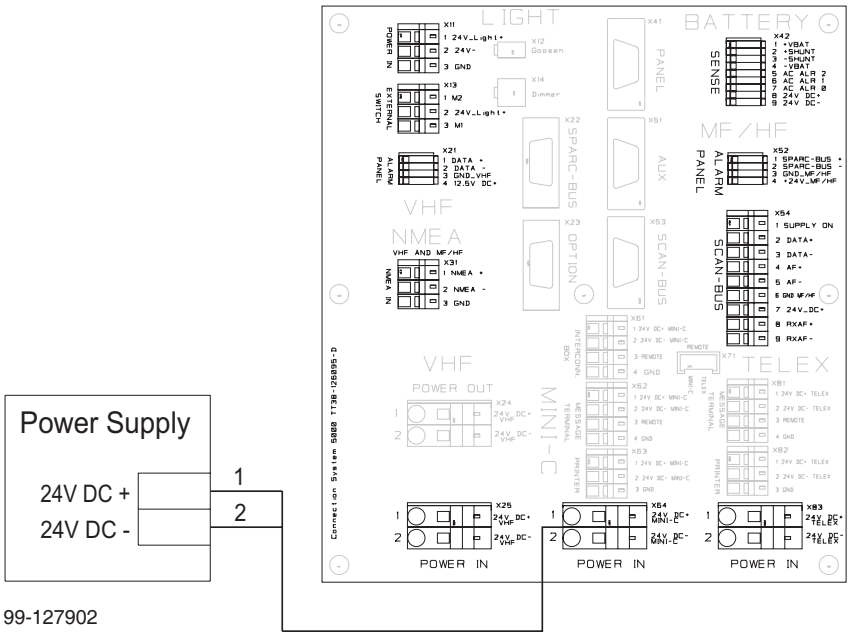

TT-98-127000-THR-C Issue: C/1035

Thrane & Thrane A/S · info@thrane.com · www.thrane.com

Thrane & Thrane