INSTRUCTION AND OPERATING MANUAL

FOR

STANDARD SIGNAL GENERATOR

Type MS25

eMS25
front page

INDEX

15207 Y

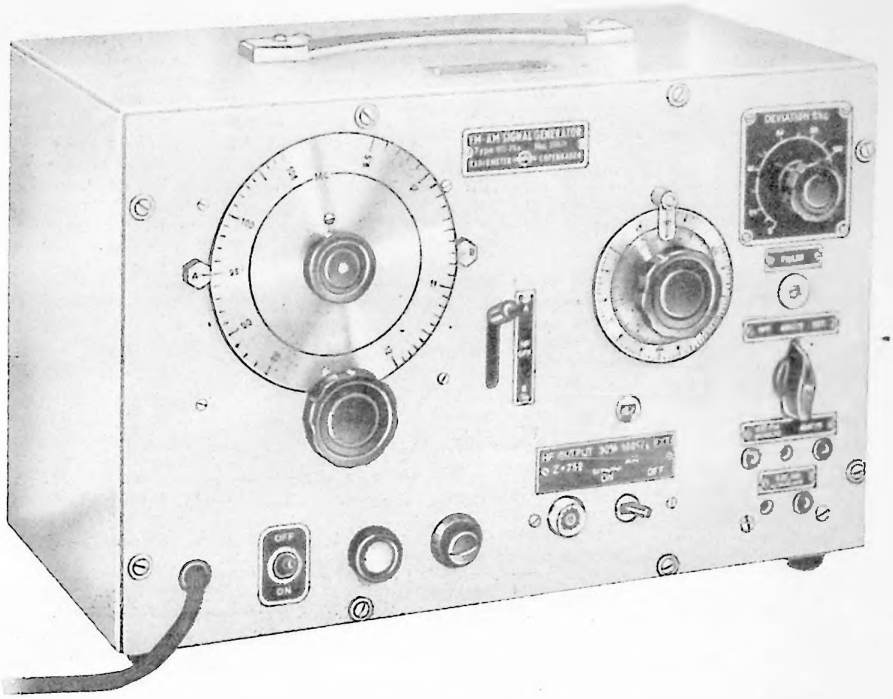

STANDARD SIGNAL GENERATOR

TYPE MS25

INTRODUCTION

The type MS25 Standard Signal Generator includes all the features necessary for measurements on FM broadcast receivers. First-class performance has been achieved at a moderate price by using simple, direct methods. Several of the circuits and design features, which contribute to the excellent performance and simplicity of the instrument, are unconventional and will be mentioned in the following description.

DESCRIPTION

The Signal Generator incorporates an RF-oscillator covering the frequency ranges 86-108 Mc/s and 9.5-12 Mc/s, and a special reactance variation circuit providing frequency deviation up to at least ±200 kc/s in both frequency ranges. The output voltage is obtained through a wave-guide-below-cut-off-type attenuator and can be adjusted over a range from 1 μV to 0.1 V. The output impedance is 75 ohms resistive over the entire tuning range.

No RF output monitoring circuit is used because the oscillator amplitude is electronically stabilized.

The FM-circuit is based on the little known technique of reactance switching which has been thoroughly investigated at the Radiometer laboratories.

A reactance-switch modulator differs from a reactance tube modulator in that the latter controls the frequency of an oscillator by varying the effective reactance connected continuously across the tuned circuit, while the reactance-switch modulator varies that part of an oscillation-period during which a fixed reactance is connected across the tuned circuit.

The reactance-switch modulator offers the advantages of wide linear frequency deviation with only slight accompanying AM, and clear and simple circuitry. All RF circuits and associated control circuits are enclosed in a shield-box, and to prevent leakage all supply leads are furnished with RF filters inside the box.

The Signal Generator incorporates a 400 c/s sine-wave oscillator for FM purposes.

This oscillator, which operates on the Wien-bridge-RC-oscillator principle, is practically free from distortion and gives a most constant output voltage. The oscillator feeds the FM-modulator through a volume control which is directly calibrated in FM-deviation in kc/s.

Provisions have been made for using an external FM-source in which case the calibration of the volume control can also be used by impressing a prescribed voltage on the input terminals.

15207Y

When the 400 c/s oscillator operates, it gives off a voltage which can be drawn from a pair of terminals. The phase of this voltage can be adjusted by means of a slotted-shaft control on the front panel.

The said voltage can be used for the synchronization or deflection of the beam of a cathode-ray oscilloscope.

At certain investigations of FM-demodulators simultaneous FM and AM is convenient. Therefore provisions have been made for the introduction of AM.

A circuit consisting of a crystal diode modulator followed by a resistive impedance matching network, can be switched in between the attenuator and the output terminal.

The insertion loss of the AM modulator and the impedance matching network is 20 db and therefore the RF output will be reduced by 10 times when using AM. In general this reduction of the RF output voltage available can be tolerated when measuring on provisionally aligned receivers. This type of AM-modulator circuit gives no residual FM and offers the greatest simplicity. AM from an internal source is fixed at 30% and the modulation frequency is double that of the power line, because the modulation voltage has been derived from the ripple voltage of the power rectifier. Provisions have been made for using an external AM source as well.

The Signal Generator operates from a 50-60 cycle power line.

SPECIFICATIONS

CARRIER FREQUENCY RANGE:
9.5-12 Mc/s
86-108 Mc/s

FREQUENCY DIAL:
Calibrated directly in Mc/s. The frequency is correct within 1% of the dial reading.

OUTPUT VOLTAGE:
1 μV to 0.1 V open circuit voltage

OUTPUT IMPEDANCE:
75 ohms. VSWR less than 1.5

ATTENUATOR DIAL:
Calibrated in μV and db above 1 μV

ACCURACY OF OUTPUT VOLTAGE:
10% ±1 μV

STRAY RADIATION:
Cannot be detected on ordinary FM-broadcast receivers

FREQUENCY MODULATION:
0-±200 kc/s

DEVIATION CONTROL DIAL:
Calibrated in ±kc

ACCURACY OF DEVIATION:
Within 10% of deviation control setting on entire carrier frequency range at a modulation frequency of 400 c/s

INTERNAL FM-SOURCE:
400 c/s within 4%. Distortion less than 0.5%.

EXTERNAL FM-SOURCE:
20 volts. Input impedance of ext. FM-terminals min. 4 kilohms.

FM-DISTORTION:
With internal FM-source, less than 2% at ±100 kc deviation. Less than 7% at ±200 kc/s.

RESIDUAL AM:
Less than 5% at 200 kc/s

FM-FIDELITY CHARACTERISTICS:
FM system flat from 50 c/s to 20 kc/s. Less than 1 db down at limits.

AMPLITUDE MODULATION:
AM from internal source fixed at about 30%. Modulation frequency double of that of the power line. Distortion less than 10%. AM from external source from 0 to more than 50%. AM system flat from 60 c/s to more than 100 kc/s. Less than 1 db down at limits. At 50% AM distortion less than 10%. Input impedance of EXT. AM-terminals about 10 kΩ. Voltage required for EXT. AM 0.1 V/% AM.

POWER SUPPLY:
110-127-150-200-220-240 volts, 50-60 c/s. Consumption: 30 watts.

TUBES:
1 type EC81 (6R4)
1 - EF80 (6BX6)
1 - EF86
1 - EL83 (6CK6)
1 - 150B2

ACCESSORY SUPPLIED:
A 1 m long type C3A3 output cable provided with UHF connector No. PL259 at both ends. 75 ohm characteristic impedance.

EXTRA ACCESSORY AVAILABLE:
Type UBT1 transformer for 300 ohm balanced output

OVER-ALL DIMENSIONS:
Height: 240 mm
Width: 365 -
Depth: 210 -

NET WEIGHT:
11 kilos

SECTION I

OPERATING PRINCIPLE

A complete circuit diagram (drawing No. 802-A2) of the Signal Generator is appended to the instructions.

1-1 THE RF AND FM SYSTEM

The tube No. 1 is operated as a Hartley oscillator with grounded cathode. The oscillator is tuned by means of the variable split-stator capacitor 3-15 pF (location B3 of the circuit diagram). Two tuning inductors for the two frequency ranges are mounted on a turret switch. For the particular frequency range selected the appropriate inductor is moved to the operating position in which connections to the oscillator circuit are made and proper magnetic coupling to the wave-guide-below-cut-off-type attenuator is established.

The reactance-switch modulator providing FM consists of a capacitor (3 pF, location A5 for range A and 30 pF, location A4 for range B) in series with a crystal diode (CR2, location C3). A constant d-c bias current derived from the voltage across the stabilizer-tube (No. 3) is led through the diode via a circuit consisting of the resistor 25 kΩ, E3, the RFC 50 μH, D3, and the resistor 6.3 kΩ, C3. The RFC provides high RF impedance of the circuit.

The modulator circuit behaves mainly like a capacitance with a value that can be controlled by varying the bias current. Thus FM is produced when an AF modulation voltage is applied to the junction between the 25 kΩ resistor and the RFC. The value of the dc-bias current is so chosen that a minimum of distortion and accompanying AM is had.

For an FM circuit like this the deviation will only remain constant for a given modulation voltage if the oscillator amplitude is constant.

The current through the oscillator tube is controlled by the tube No. 2 connected in series with the oscillator tube. The current will depend on the

oscillator amplitude in such a way that the latter will remain constant. As shown in the circuit diagram this is obtained by means of a crystal-diode rectifier (CR1, location C1) which measures the oscillator amplitude. The current from the rectifier controls the grid voltage of the series-tube No.2. The correct operation value of the amplitude is set by means of a bias current drawn from the constant voltage across tube No.3.

Another property of the FM circuit used is that the deviation will vary with the cube of the carrier frequency.

A potentiometer (15 kΩ, location F5) which is ganged with the tuning capacitor provides for changing of the modulation voltage in a way giving constant deviation over the tuning range. Only part of the total variation range of the potentiometer is used. The circuit can be regarded as a variable π-network attenuator, and the impedance looking into the arm is nearly constant over the variation range.

All RF parts of the Signal Generator are enclosed in a shield thus forming an RF assembly.

To prevent leakage all supply leads are carefully filtered for RF before they are brought out through the shield.

1-2 THE OUTPUT SYSTEM

An output voltage between 1 μV and 0.1 volt at an internal output impedance of 75 ohms is available at a coaxial connector on the front panel. This output is obtained through a mutual inductance or waveguide-below-cut-off type attenuator ($TE_{1,1}$ mode).

The attenuator is coupled to the tank coil of the oscillator as described in the previous paragraph.

No RF output monitoring circuit is used because the oscillator amplitude is electronically stabilized.

The pickup loop of the attenuator is mounted on a plunger which is moved backwards and forwards in the attenuator tube by means of a rack and pinion drive. The plunger incorporates a well in which a 75 ohm resistor is mounted. The series connection of resistor and pickup coil terminates the output cable. The pickup loop is so designed that the stray capacitances between coil ends and ground form a symmetrical four-pole network with

an image impedance of about 75 ohms.

The result of this design is a very smooth termination of the output cable over the entire operation frequency range.

1-3 THE AM-SYSTEM

Provisions have been made for AM.

A circuit consisting of a crystal-diode modulator (CR3, location B7) followed by a resistive impedance matching network (180Ω, 100Ω, and 100Ω, location B8) can be switched in between the attenuator and the RF-output connector. Both internal and external modulation source can be used. Using internal source the modulation is made fixed at about 30% AM, and the modulation voltage is derived from the ripple voltage of the power rectifier. The modulation frequency is thus the double that of the power line.

Using external modulation source the modulation percentage depends on the impressed modulation voltage (0.1 volt/per cent).

The AM-system incorporates a dc-bias current circuit. The current is taken from the dc output of the power rectifier and set to the proper value by means of the potentiometer P_1, 500 kΩ, location C9.

The insertion loss of the modulator and the impedance network is adjusted to 20 dB, and therefore the RF output will be reduced by 10 times when using AM.

1-4 THE 400 c/s SINE-WAVE OSCILLATOR

The Signal Generator incorporates a 400 c/s sine-wave oscillator for FM purposes.

This oscillator consists of the tubes No.4 and 5and the associated circuits.

The oscillator operates on the Wien-bridge-RC-principle. Regeneration between the tubes is controlled by a frequency selective network (2 MΩ, E11, 200 pF, F11, 1 MΩ, G11, and 400 pF, G11).

At 400 c/s this regenerative network has a peak response which makes the circuit oscillate at that frequency. Another network including a resistor part of which is variable (5 kΩ and 1 kΩ, E11) applies a degenerative voltage across the lamp (3W/120V, location G11). The rapid increase in re-

sistance of the lamp with respect to increases in feedback voltage tends to limit the oscillation to the linear portion of the tube characteristics. The oscillator gives a most constant output voltage and is practically free from distortion. In general it has a total harmonic content of less than 0.5%. The output voltage which is obtained from the plate of tube No. 5 is adjusted to 20 volts rms by means of the variable resistor 1 kΩ, location E11.

When the 400 c/s oscillator operates, it gives off a voltage which can be drawn from the terminals "400 c/s". The phase of this voltage can be adjusted by means of a slotted-shaft control (500 kΩ, F8) on the front panel. The said voltage can be used for the synchronization or deflection of the beam of a cathode-ray oscilloscope.

1-5 THE FM-DEVIATION CONTROL AND FM SWITCH

The deviation is adjusted by means of the potentiometer 20 kΩ, G7, which is directly calibrated in FM-deviation in kc/s. The calibration refers to a voltage of 20 volts across the potentiometer. Therefore the calibration can also be used with external FM-source when the voltage across the input terminals "EXT.FM" is 20 volts.

The FM switch (location E8) provides for switching between internal and external FM-source. The switch is provided with an "off" position giving no FM.

1-6 THE POWER SUPPLY

The instrument operates from a 50-60 cycle power line. The line voltage selector can be set to the following voltages: 110, 127, 150, 200, 220, or 240 volts, a-c.

The full-wave rectifier circuit associated with the selenium-iron type rectifier SSF250 C90 (location AB11) supplies a d-c voltage of approximately 240 volts for the RF-system and the 400 c/s oscillator.

The power supply also provides filament power for all the tubes.

SECTION II

OPERATING INSTRUCTIONS

2-1 CONNECTION

Before connecting the instrument to the power line, make sure that the line voltage selector is set to the correct voltage. The voltage selector is accessible when the cover plate at the back of the cabinet is removed. Before the instrument leaves the factory, the voltage selector is always set to 220 volts.

Switch on the instrument with the power switch ON-OFF and allow to warm up for a few minutes.

2-2 CONTROLS, DIALS AND TERMINALS

All controls are located on the front panel.

(a) Frequency controls

The main tuning dial is calibrated directly in megacycles. Two scales are used, one for each carrier frequency range. The main tuning dial is operated by means of a friction drive knob.

The frequency range switch which selects the carrier frequency range is provided with an OFF position. In this position no RF output is present.

(b) Output control

The output level is set with the output attenuator dial which is directly calibrated in μV from 1 to 10^5 and in db from 0-100 db above 1 μV.

(c) Modulation controls

The DEVIATION control provides for continuous control of FM deviation. The dial is directly calibrated in ±kc/s from 0 to 200.

The FM switch which chooses between internal and external FM source is provided with an OFF position giving no FM.

A toggle switch provides for switching the AM circuit on and off. In the position ON the RF output is reduced by 10 times.

Another toggle switch chooses between internal and external AM source. Internal AM source gives about 30% AM with a modulation frequency equal to the double that of the power line. The voltage requirement of an external AM source is about 0.1 volt/per cent across the input terminals.

(d) PHASE control

The PHASE control provides for adjustment of the phase of the voltage which can be drawn from the "400 c/s" terminal when the 400 c/s oscillator operates.

(e) Terminals

The power cord is integral with the instrument.

RF output can be drawn from the HF-OUTPUT terminal, which fits a type UHF connector No.PL259. A 1 m long type C3A3 output cable provided with a VHF connector No.PL259 at both ends and with a characteristic impedance of 75 ohms is supplied with the instrument.

The EXT.FM terminals provide for the connection of an external FM source. When using external FM source, the calibration of the deviation control is valid only if the voltage across the terminals is 20 volts. The minimum input impedance of the EXT.FM terminals is about 4 kΩ.

The EXT.AM terminals provide for the connection of an external AM source. The voltage requirement is about 0.1 volt/per cent. The input impedance of the terminals is about 10 kΩ..

When the 400 c/s oscillator operates, it gives off a voltage which can be drawn from the "400 c/s" terminals. The phase of this voltage can be adjusted by means of the PHASE control.

2-3 STEP-BY-STEP OPERATION

(1) Determine the line voltage on which the instrument is to operate. Set the line voltage selector to the proper voltage.

(2) Connect the instrument to the power line, switch it on, and allow it to warm up for five minutes or more.

(3) Using the FM and AM switches, select the type of modulation. If external modulation is wanted, connect an external AF source to the EXT.FM and/or EXT.AM terminals, according to requirements.

The setting of the main frequency dial, the attenuator dial and the modulation level depends on the requirements.

SECTION III

MAINTENANCE

3-1 GENERAL

The type MS25 Signal Generator is a delicate instrument, so unnecessary repair or attempts to improve it should not be made.

Such repairs as may become necessary should be made by skilled persons only, provided with sufficient equipment to ensure a proper repair.

When transporting, handling and operating the instrument with care, its useful life will be prolonged and trouble will be reduced to a minimum.

When the instrument is not in use, the power switch should be turned off.

The Signal Generator should be protected from dust, moisture and extreme temperatures. It is advisable from time to time to inspect the exterior for dirt and corrosion.

3-2 REMOVING THE INSTRUMENT FROM THE CABINET

The Signal Generator can be removed from the cabinet when the fixing screws along the edge of the front panel have been removed.

3-3 TUBE REPLACEMENT

In general the tubes of the type MS25 Signal Generator require no replacement until they cause some kind of trouble.

The troubles which are generally due to faulty tubes are: insufficient power output, faulty internal modulation, etc.

In general tubes with average characteristics can be used for any replacement.

The tubes No. 4 and 5 of the 400 c/s oscillator can readily be replaced when the instrument is removed from the cabinet.

On replacing tube No. 4 or 5 it is advisable to check the output voltage of the oscillator and the total harmonic content of this voltage. The voltage

can be measured across the choke DO-250, E9 and must be exactly 20 volts. If required, it can be adjusted to the proper value by means of the variable resistor P_3, 1 kΩ, E11. The total harmonic content of the output should be less than 0.5%.

The type GE3W/120V lamp has an extremely long life and should not be replaced indiscrininately. Should the lamp fail, however, the output voltage should be checked after replacement.

Replacement of a tube in the RF assembly can be made when the shield cover of the assembly has been removed.

In general a replacement of the oscillator tube (No.1) will not seriously affect the resonance frequency of the circuit. Should this be the case, however, a tube must be selected, so that the calibration remains unaffected.

It is desirable to check the output after replacement. The output must have the correct value and must be constant within a few per cent over the entire tuning range.

Replacement of the regulator tube (No.2) may cause a change in the output voltage from the oscillator and consequently the FM properties (see section I, paragraph 1-1). Therefore, when changing tube No.2 it is advisable to check the output and the FM deviation and distortion.

If no suitable tube is available, the oscillator amplitude may be set to the correct value by replacing the resistor 1 MΩ, F2 with a resistor of a slightly differing value.

Replacement of the stabilizer tube (No.3) may also cause a change in the oscillator output and FM properties, but in general this is not the case. However, oscillator amplitude and FM deviation and/or distortion can be reset to the proper values by replacing the resistor 1 MΩ, F2 and the resistor 25 kΩ, E3, with resistors af sligthly differing values.

3-4 FREQUENCY MODULATION ADJUSTMENT

The carrier deviation may be checked by the carrier zero method. This method is based on the fact that the carrier frequency disappears at discrete values of the modulation index.

The modulation index B is defined as the ratio of the frequency deviation ΔF to the modulating frequency f, i.e.

$$B = \frac{\Delta F}{f}$$

and consequently the frequency deviation

$$\Delta F = B \cdot f$$

The carrier will be zero at the following modulation indices:

2.404
5.520
8.653
11.791
14.930
18.071
21.212 etc.

A selective communications receiver tuned to the output frequency of the signal generator can be used as an indicator to determine the point at which the carrier disappears.

The FM deviation read on the deviation-control dial may be wrong if, for some reason or other, the modulation voltage from the 400 c/s generator or from the external modulation source differs from 20 volts. The amplitude of the 400 c/s oscillator can be reset by means of the variable resistor P_3, 1 kΩ, E11.

If the deviation-control-dial reading is erroneous and the modulation voltage is 20 volts, the sensitivity of the modulation system has changed. This may be a result of an error in the RF circuit and therefore it is advisable to check the RF output. If the value of the output is correct and constant within a few per cent over the tuning range, the error may be due to a defective modulation crystal-diode (CR2, C3).

3-5 AMPLITUDE MODULATION ADJUSTMENT

The degree of amplitude modulation can be checked by converting the output frequency of the Signal Generator into a low frequency of a few hundred kc/s.

This frequency can be observed on a cathode-ray oscilloscope and be used for determining the AM percentage. The AM percentage at internal AM can be adjusted by means of the variable resistor P_2, 500 Ω, C11.

(The potentiometer P_1, 500 kΩ, C9, controls the d-c bias of the AM crystal diode and accordingly the insertion loss of the AM circuit. In general the setting of this resistor should not be changed).

3-6 OPERATING VOLTAGES AND CURRENTS OF THE SIGNAL GENERATOR

The voltages and currents listed on next page can be used as references when servicing the Signal Generator. The values are mean values from a series of measurements, and a deviation of up to 20% may usually be neglected. The voltmeter should have a negligible consumption (vacuum-tube voltmeter).

VOLTAGE MEASUREMENTS

from		to	d-c volts
tube No. 1	pin No. 8	chassis	250
	3	"	130-140
	3	pin No. 1	4-10
tube No. 2	pin No. 7-8	chassis	130-140
	2	"	–0.9 - –2.5
tube No. 3	pin No. 1	"	150
tube No. 4	pin No. 3-8	"	1.4
	6-1	"	75
tube No. 5	pin No. 3-6	"	5
	1	"	225
	7	"	245
crystal diode pos. 1, "anode"		"	–17 - –19
across resistor 25 kΩ pos. E3			120

CURRENT MEASUREMENTS

Total primary consumption at 220 volt line voltage 225 mA∿

3-7 FUSES

The fuse mounted on the front panel is the power line fuse. A 1 amp fuse should be used in case of line voltages higher than 200 volts. For lower voltages the fuse should be able to carry a correspondingly higher current.

The fuse protecting the power transformer is accessible when the cover plate at the back of the instrument is removed. This fuse is mounted on the line voltage selector and should be 0.2 amp.

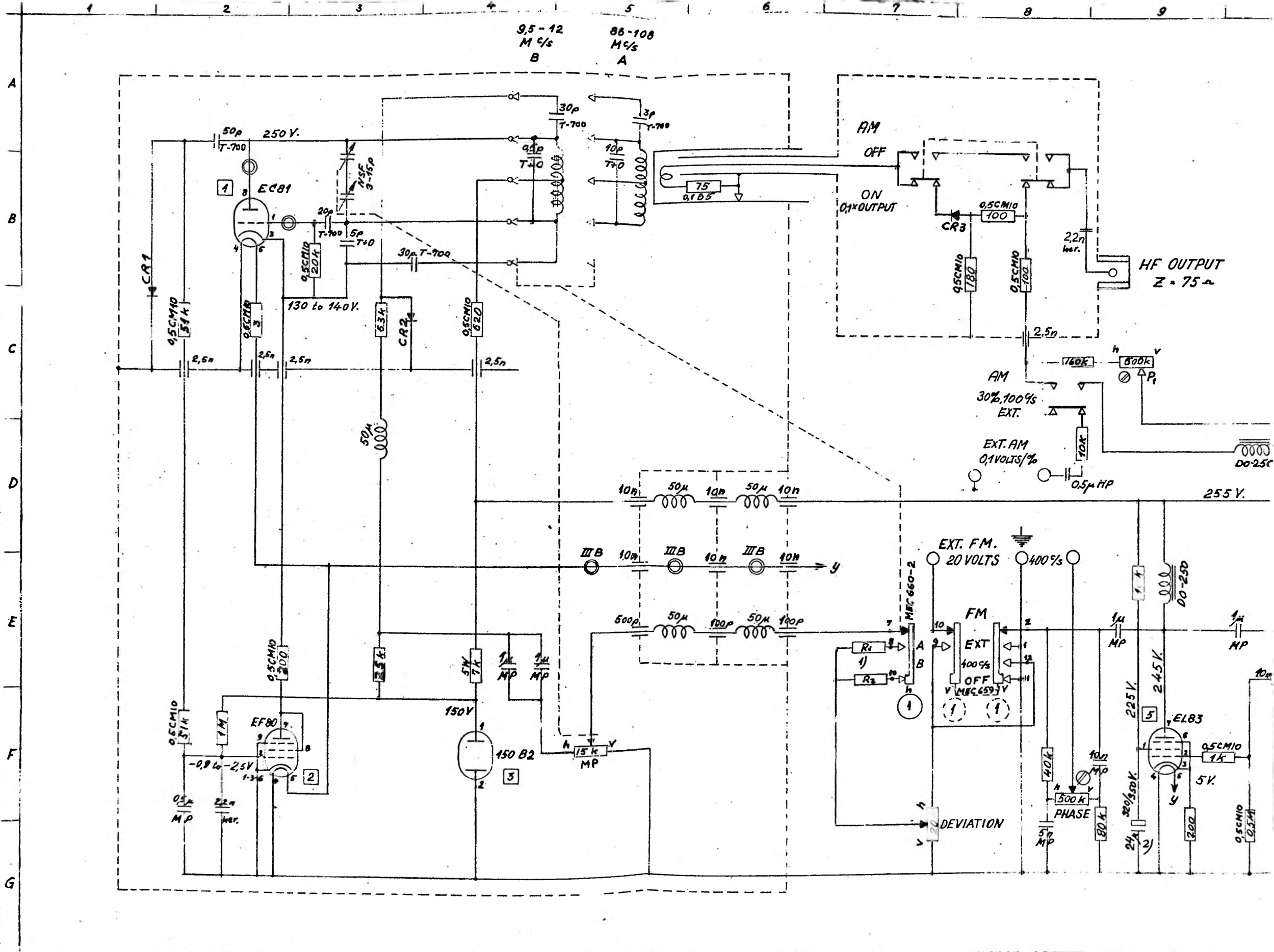
9,5 - 12 Mc/s
B
86 - 108 Mc/s
A
EC81
250 V.
130 to 140 V.
AM
OFF
ON
0,1×OUTPUT
HF OUTPUT
Z = 75 Ω
AM
30%, 100%/s
EXT.
EXT. AM
0,1 VOLTS/%
255 V.
EXT. FM.
20 VOLTS
400%/s
FM
EXT
OFF
DEVIATION
PHASE
EF80
150 B2
EL83
225 V.
245 V.
5 V.
DO-250

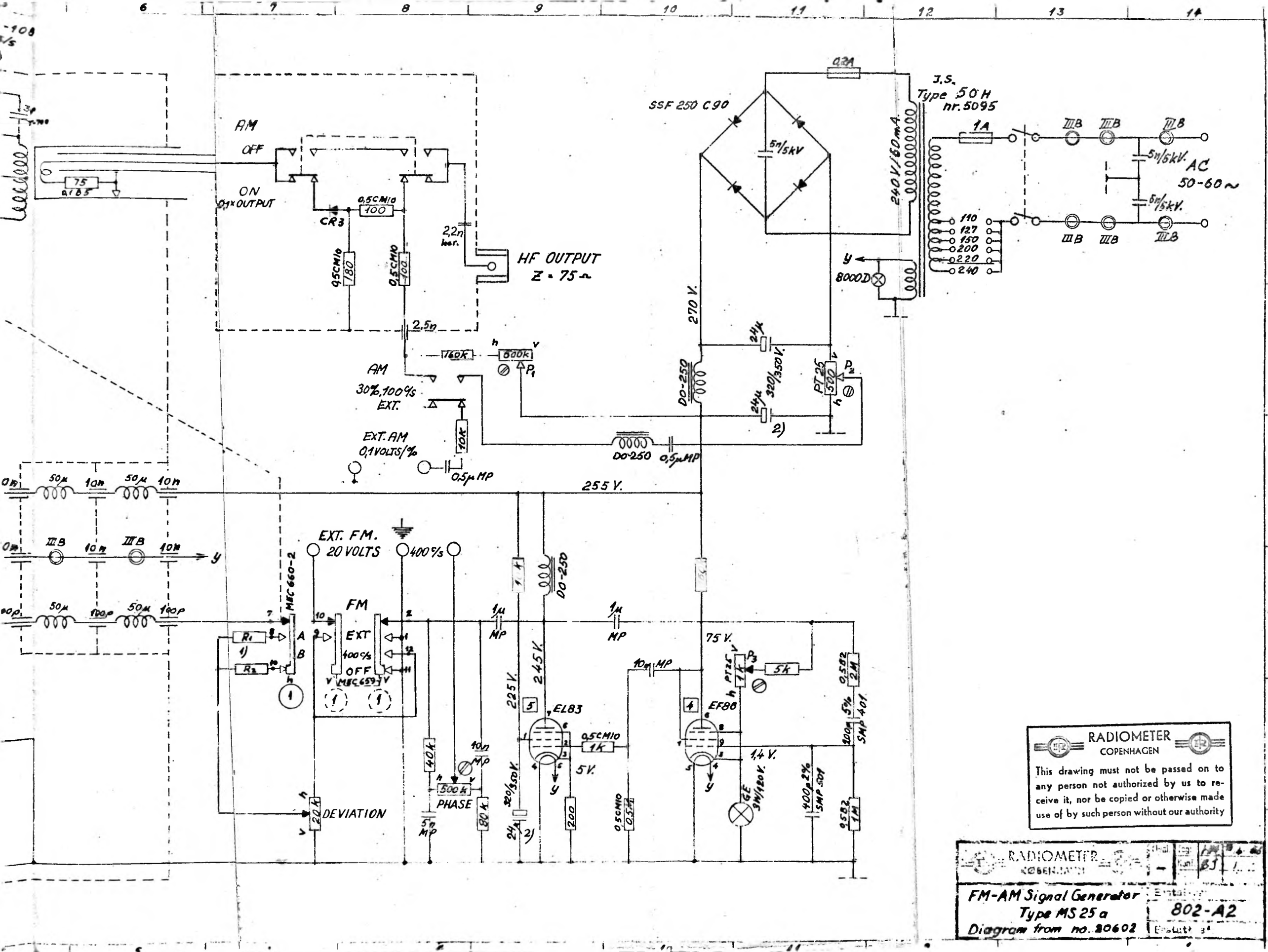

RADIOMETER KØBENHAVN

FM-AM Signal Generator
Type MS 25 a
Diagram from no. 20602

802-A2