file: FRIDAMAN
Release 2: 1990-09

==========

U S E R S H A N D B O O K

==========

2.1 TECHNICAL SPECIFICATIONS LYREC TAPE RECORDER "FRIDA"

Tape format:	1/4"
Track format model:	2/1; 0.75 mm track separation, full track erase. 2/2; 2 mm track separation, split erase 2/2 F 2 mm track separation, full track erase. TC; 2 mm track separation, split erase and 0.35 mm centre track
Equalisation:	CCIR or NAB, user selectable below front panel flap.
Tape speeds:	3 3/4, 7 1/2 and 15 ips.
Speed accuracy:	+/- 0.2 %, crystal controlled.
Varispeed:	+/- 7 semitones (0.65 to 1.5 x nom speed) with external varispeed unit.
Wind time:	< 70 sec. for 2400 feet (730 m)
Wind speed:	Max. 480 ips (12 m/s)
Reel type:	CINE type, adapters available for NAB and DIN type spools.
Max. reel size:	300 mm.
Wow & flutter:	3 3/4 ips < 0.12 % (DIN 45507 Peak wtd) 7 1/2 ips < 0.08 % 15 ips < 0.06 %
Tape tension:	80 g
Tape timer reading:	15 ips +/- 59.59 real time 7 1/2 ips +/- 1.59.59 real time 3 3/4 ips +/- 3.59.59 real time
Level meter:	PPM indicator with 12 LED segments.
Line input:	Electronically balanced. Zin = 10 kohm. Clipping level > 26 dBm. Common mode rejection > 60 dB.
Line output:	Electronically balanced. Zout = 40 ohm Clipping level > 26 dBm into 600 ohm. Output symmetry > 40 dB.
Headphone output:	Unbalanced. Zout 180 ohm Max. Output level > 18 dBm into 600 ohm.
Bias frequency:	300 kHz
Bias system:	Dolby HX Pro
Erase frequency:	150 kHz
Frequency response:	15 ips Rec-Repro 30 Hz-22 kHz +1/-3 dB 7 1/2 ips Rec-Repro 30 Hz-20 kHz +1/-3 dB 3 3/4 ips Rec-Repro 30 Hz-14 kHz +1/-3 dB
Recording flux:	250 - 320 - 510 nWb/m, internally jumper select.
Signal to noise ratio:	67 dB"A", 15 ips/510 nWb/m, NAB equalisation
Monitor:	Built in monitor loudspeaker and headphone output.
Crosstalk:	Model 2/1 50 dB, 1kHz/510 nWb/m Model 2/2 52 dB, 1kHz/510 nWb/m
Erase efficiency:	> 78 dB at 1 kHz/510 nWb
Power requirements:	115 or 230 Volt +10/-15 %, 50/60 Hz. single phase.
Power consumption:	100 VA max.
Weight:	Tape deck 12 kg. Carrying handle 0.5 kg. Rack mounting brackets 0.4 kg. Cover/lid 1.5 kg.
Dimensions:	440 x 80 x 398 mm (W x H x D)
Working position:	Horizontal, tilted or vertical.
Working conditions:	Ambient temperature range +10 - +40°C Humidity range 30 - 90 %.

Chassis connectors:	Mains; IEC
	Line in; XLR-3 female
	Line out; XLR-3 male
	Remote; D25-sub female
	Synchro; D25-sub male
	Remote Audio; IDC
Sensors:	Tape end; optical
	Tape presence; Infrared

Tape dependent specifications refer to AGFA 528 or equivalent tape at a flux of 510 nWb/m using 10.5" reels. The specifications are subject to change without notice. We reserve the right to make technical modifications without prior notice as technical progress may warrant.

Small differences in component values or circuitry may be found between diagrams and actual electronics. If these changes are of major importance for performance, revised diagrams will be released.

Only figures with tolerances or limit can be considered guaranteed data. Figures without tolerances are informative data, without guarantee (IEC 278, section 5.4 note).

2.2 DIMENSIONS

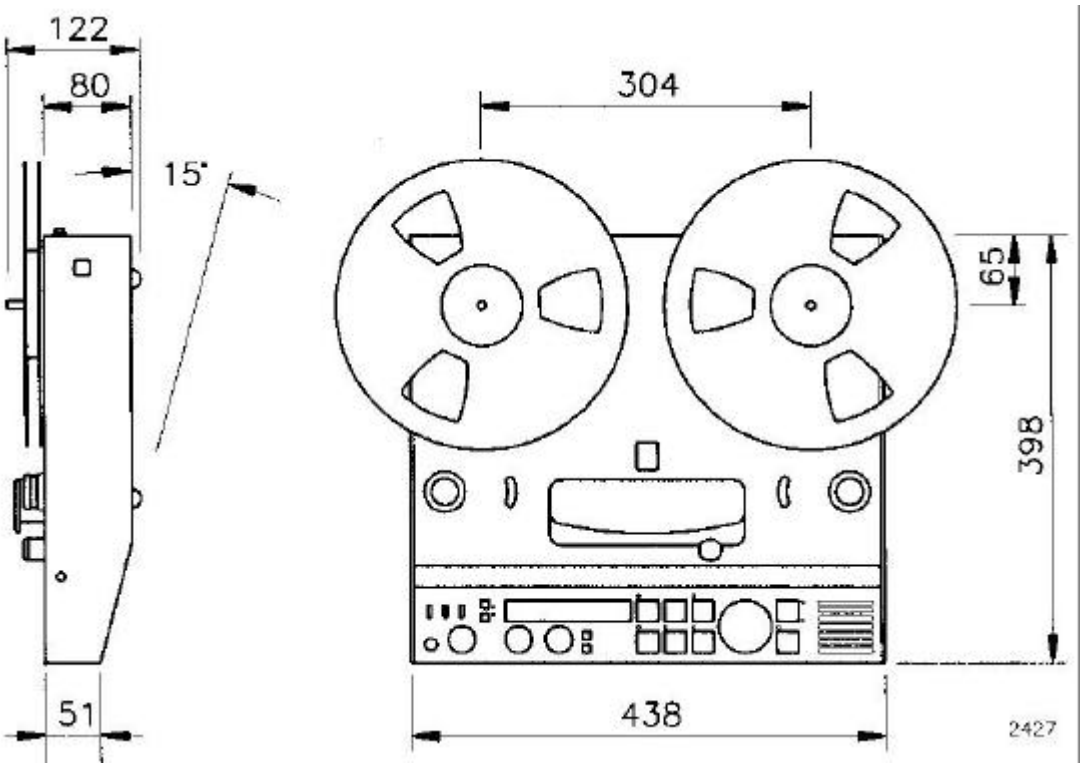

2.3 STANDARD ACCESSORIES

QTY	NUMBER	DESCRIPTION
1		Users handbook
1		Testreport
1	955115	Mains cable
2	961906	Fuse 630 mA Slow blow
2	961914	Fuse 4 A Slow blow
1	969010	Allen key 1.5 mm
1	969017	Allen key 2 mm
1	969012	Allen key 2.5 mm
1	969014	Allen key 4 mm
1	969020	Trimmer key

2.4 OPTIONAL ACCESSORIES

962211 NAB reel adapter
501164 AEG adapter with 295 mm platter
501187 AEG adapter with 270 mm platter
501188 AEG adapter with 282 mm platter
455501 Carrying handle/support for tilted operation
455511 Rack mount kit
960452 Fibreglass flightcase
453001 Floorstand on castors, operating height 84/93 cm
453011 Console on castors, operating height 84 cm
453013 Console on castors, bridge 2 speakers and shelf
453012 Console on castors, bridge with VU meters and 2 speakers
501178 Extender board for tape servo, capstan and logic boards
501179 Extender board for audio board
501180 Extender board for audio logic/driver board
501181 Extender board for input/output and TC boards

3. GENERAL DESCRIPTION

The FRIDA concept is a general purpose tape recorder for 1/4" tape designed for professional users. FRIDA is designed as a very compact and versatile unit that can be put into operation in almost any application within the broadcast and studio world.

The compact design makes it very suitable for mobile applications for both recording and editing. For editing the machine is self contained and do not need any external accessories.

For studio applications FRIDA is easily used as a table top recorder or installed in a floorstand. A rackmounting kit is also available.

3.1 SERVICE MANUAL

This manual covers the description, installation and operation of the LYREC "FRIDA" range 1/4" tape recorders. The available configurations are the following;

- FRIDA 2/1 Stereo recorder with 0.75 mm track separation. Equipped with full track erase head. Fully equipped frontpanel with level controls.

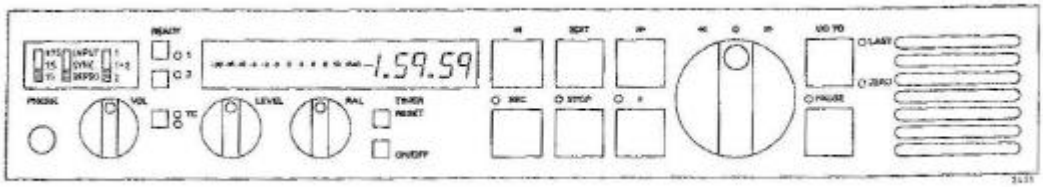

- FRIDA 2/1 BC European broadcast version. Stereo recorder supplied without external audio level controls and PPM meter.

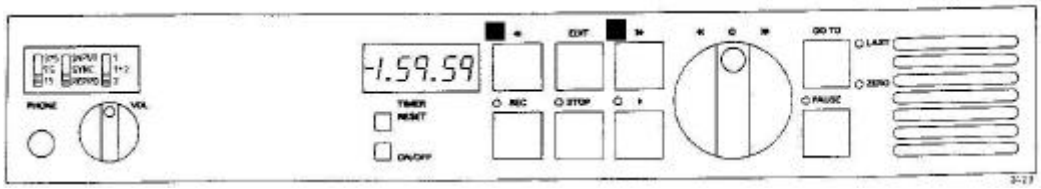

- FRIDA 2/2 Two-track recorder with 2 mm trackseparation and split erase head. Fully equipped frontpanel with level controls and PPM meter.

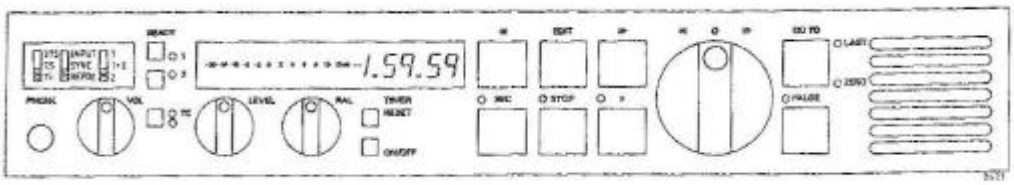

3.2 TAPE DECK

The tape deck has a very compact and clean layout. The tape path is simple and tape is easy to lace.

The nominal tape speeds are controlled by a crystal controlled DC-motor and offers three nominal tape speeds or varied over +/- 7 semitones with an external varispeed control. Tape speed may also be controlled from an external reference frequency source enabling two or more machines to be synchronised together via an external synchronising equipment.

Tape tension on either side of the capstan is maintained within tolerances by servo controlling the wind motors by way of the tape tension sensing arm assembly and reel motor tacho sensors.

All tape transport functions except variable wind speed and tape speed selection are duplicated at the remote control output.

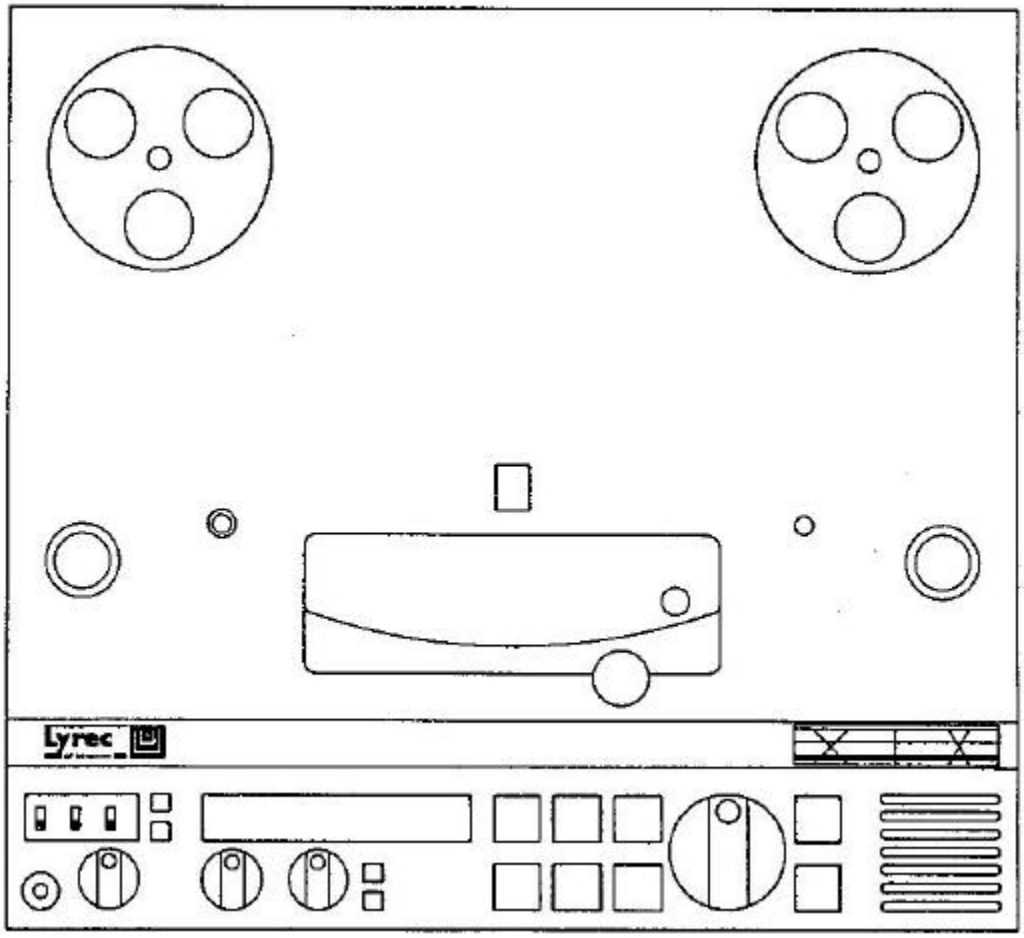

4. INSTALLATION

4.1 UNPACKING

The machine has been carefully packed in a specially designed container. Inspect it visually and if any damages are observed notify your forwarding agent immediately. If all is normal, unpack the machine carefully and retain the packing material for possible future use.

Remove the lower frontpanel and inspect the audio amplifier and all the logic cards, they should all be firmly seated in position.

Inspect the tape deck and check that none of the metal parts that come in contact with the tape are damaged in any way.

Remove the headblock cover (pull up) and check the headblock and particularly the front of the head stacks.

Rollers should be smooth and move freely with no indication of friction or roughness.

The recorder can be installed horizontal, vertical or tilted. It can be used as a table top unit or permanently installed in a 19" rack or mounted flush with a table surface.

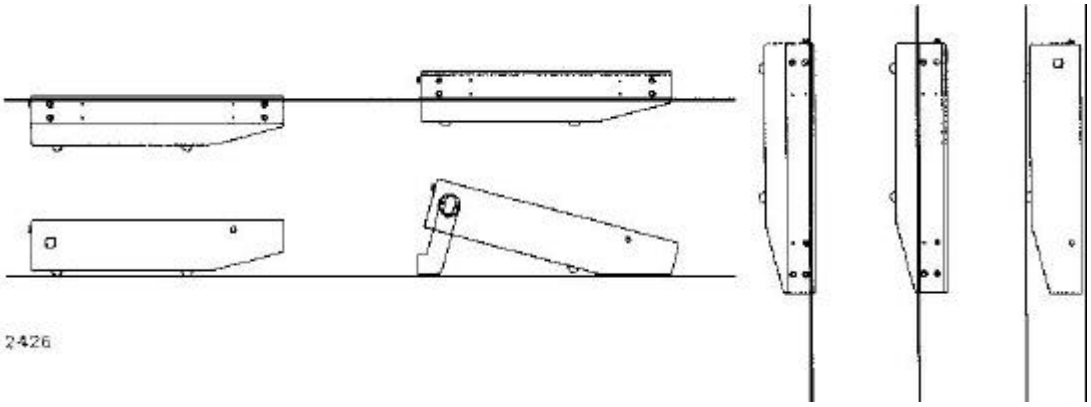

FLUSH MOUNTING TABLE TOP TABLE TOP TILTED WALL MOUNT

When mounted in rack or other closed cabinet the recorder must be in a well ventilated position.

4.2 INTERCONNECTIONS

The Lyrec "FRIDA" recorder is designed for operation on mains voltage of either 120 or 240 V (voltage range 98-127 and 195-253 volt). Check the rear panel label before mains is connected.

For operation with mains voltages outside this range special instructions apply.

After checking the above refer to the CONNECTOR TABLE and the CONNECTOR DIAGRAMS and wire up the mains cable.

BE SURE YOUR LOCAL MAINS VOLTAGE IS COMPATIBLE WITH THE MACHINE.

BE SURE THAT YOU COMPLY WITH YOUR LOCAL REGULATIONS AND PAY PARTICULAR ATTENTION TO THE EARTHING CONNECTIONS.

Selection of 120 or 240 volt operation is done at the rear panel voltage selector.

The primary mains fuse must be changed to correct value after voltage selection.

240 V	630	mA
120 V	1.25	A

Refer to CONNECTOR TABLE and CONNECTOR DIAGRAMS and wire up all audio connections.

This completes the installation.

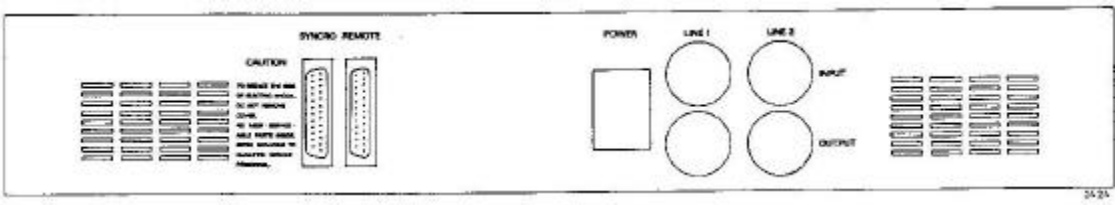

4.3 CONNECTOR TABLE

DESIGNATION	CONNECTOR TYPE	MATING CONNECTOR CONNECTS FROM/TO	MATING CONNECTOR WIRED BY
LINE INPUT TRACK 1-2	XLR	FROM EXTERNAL SIGNAL SOURCE	USER
LINE OUTPUT TRACK 1-2	XLR	TO EXTERNAL EQUIPMENT	USER
REMOTE	DP25	TO EXT REMOTE CONTROL	USER
SYNCHRO	DP25	TO/FROM SYNCHRONISER	USER
POWER	IEC	FROM MAINS SUPPLY	USER

4.4 CONNECTOR DRAWINGS

POWER:

Live
Ground
Neutral

Line in/out:
Balanced
connection

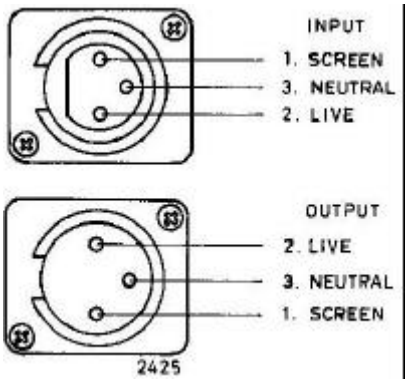

Note: A groundlift jumper for the output connector is located on the connector terminal board behind the rear panel.

4.5 REMOTE CONNECTOR

PIN NO	FUNCTION/DESCRIPTION	IN/ OUT	AT ACTIVE	AT ACTIVE	NOTES
1	Ground				
2	Ground				
3	+ 10 V	O			max load 250 mA
4	C K	O	Pulse		serial clock
5	STOP	I	0 V	+5 V	
6	PLAY	I	0 V	+5 V	
7	FAST FORWARD	I	0 V	+5 V	
8	REWIND	I	0 V	+5 V	
9	RECORD	I	0 V	+5 V	
10	Varispeed control	I	0-15 V		Nom speed +7,5 V
11	Varispeed select	I	0 V	+15 V	
12	Fader start+/Fader start	I	5 V/0 V	0 V/5 V	Note 1
13	Cue	O	0 V	+15 V	50 mSec pulse
14	+ 15 V	O			max load 50 mA
15	- 15 V	O			max load 50 mA
16	+ 5 V	O			max load 100 mA
17	S D	O	Pulse	+5 V	serial data
18	GO TO	I	0 V		
19	PLAY indicator	O	5 V	0 V	
20	PAUSE	I	0 V	+5 V	
21	STOP indicator	O	5 V	0 V	
22	Bo	I/O	15 V	0 V	Note 2
23	B1	I/O	15 V	0 V	Note 2
24	Record indication ch 1	O	+15 V	0 V	noise reduction control
25	Record indication ch 2	O	+15 V	0 V	noise reduction control

NOTE 1: Fader start is jumper selectable to operate on make or break. Jumper located below frontpanel flap. Fader start will start the tape from Pause mode only. See 5.26 for fader start operation.

NOTE 2: Bo and B1 controls tapespeed. Lines can both be used as outputs to read speed switch position or, when switch is set to 7 1/2 ips (middle position), be used as an external speed select.

NOTE 3: Signal names in red indicates inverted signals (active low).

NOTE 4: A wiring diagram for a parallel wired remote control is found in diagram 2722.

4.6 SYNCHRO CONNECTOR

PIN NO	FUNCTION/DESCRIPTION	IN/ OUT	AT ACTIVE	AT ACTIVE	NOTES
1	Ground				
2	Ground				
3	+ 10 V	O			max load 100 mA
4	Time code in, hot	I			0.5-4 V pp
5	STOP	I	0 V	+5 V	
6	PLAY	I	0 V	+5 V	
7	FAST FORWARD	I	0 V	+5 V	
8	REWIND	I	0 V	+5 V	
9	RECORD	I	0 V	+5 V	
10	Ext ref. frequency	I	>3Vpp		Nom freq 9,6 kHz
11	Ext ref. select	I	0 V	+15 V	
12	Tach	O	+15V	0 V	64 Hz at 3 3/4"
13	Tape direction	O	+5V	0 V	+5 V at forward
14	+ 15 V	O			max load 50 mA
15	- 15 V	O			max load 50 mA
16	+ 5 V	O			max load 50 mA
17	Time code in, cold	I			
18	FAST FORWARD indicate	O	+5 V	0 V	
19	REWIND indicate	O	+5 V	0 V	
20	PLAY indicate	0	+5 V	0 V	
21	STOP indicate	O	+5 V	0 V	
22	RECORD indicate	O	+15 V	0 V	
23	NC				
24	Time code out, hot	O			2 Vpp for 729 nWb
25	Time code out, cold	O			

NOTE 1: Signal names in red indicates inverted signals (active low).

4.7 REMOTE AUDIO CONNECTOR

PIN NO	FUNCTION/DESCRIPTION	IN/ OUT	AT ACTIVE	AT ACTIVE	NOTES
1	Line in I send				nom level 0 dBu. Note 3
2	Ready I switch	I	0 V	+15 V	
3	Line in I return				nom level 0 dBu. Note 3
4	Ready II switch	I	0 V	+15 V	
5	Line in II send				nom level 0 dBu. Note 3
6	NAB	O	+15 V	0 V	
7	Line in II return				nom level 0 dBu. Note 3
8	Mute	O	0 V	+15 V	
9	Line out I send				nom level 0 dBu. Note 3
10	+ 15 V	O			Max load 50 mA
11	Line out I return				nom level 0 dBu. Note 3
12	- 15 V	O			Max load 50 mA
13	Line out II send				nom level 0 dBu. Note 3
14	Ground	O			
15	Line out II return	O			nom level 0 dBu. Note 3
16	TC code LED (green)	O	0 V	+ 5 V	
17	Input	O	0 V	+15 V	
18	Sync	O	0 V	+15 V	
19	Ready I LED	O	0 V	+ 5 V	
20	Ready II LED	O	0 V	+ 5 V	
21	TC ready switch	I	0 V	+ 5 V	
22	TC ready LED (red)	O	0 V	+ 5 V	
23	Panel amp Ch 1	O			Signal for Ch I panel amp
24	NC				
25	+ 17 V	O			Max load 100 mA. Note 2
26	Power ground	O			

The REMOTE AUDIO CONNECTOR is a 26 pin male IDC connector, located at the bottom panel of the recorder. It is only used to connect the optional meter and speaker bridge on the Lyrec console.

Note 1: Pins 23-26 only connected when panel amp Ch II is present.
Note 2: Max load in excess of panel amplifiers and VU meter panel.
Note 3: "nom level 0 dBu" corresponds to a reference input/output level of +6 dBu. If reference input/output level is changed, internal line levels change accordingly.
Note 4: Signal names in red indicates inverted signals (active low).

5. OPERATION; PRIMARY CONTROLS

Primary controls available on the frontpanel.

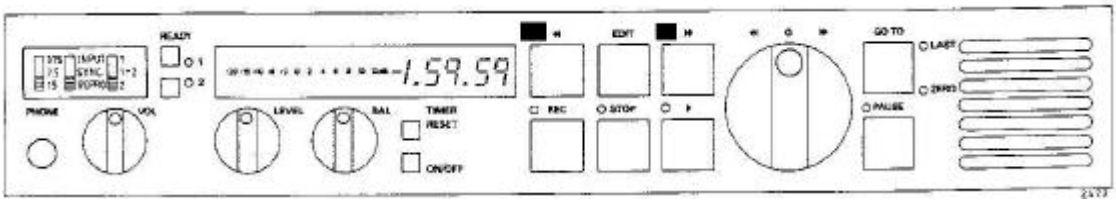

5.1 OVERVIEW OF FRONT PANEL CONTROLS AND INDICATORS

TAPE DECK COMMANDS:	FUNCTION:
UNLOAD	Power on condition. No tape tension.
STOP	All stop. Overrides GOTO.
PLAY	Starts tape if loaded properly.
RECORD + PLAY	Activates RECORD mode.
RECORD	Record must be pressed together with PLAY to activate RECORD mode.
<<--	Will activate full speed REWIND.
-->>	Will activate full speed FAST FORWARD.
PAUSE	Play stand-by.
PAUSE + RECORD	Record stand-by.
GO TO (one press)	Locate last PLAY position and STOP.
GO TO (two press)	Locate 0.00.00 and STOP.
GO TO -> PLAY	Locate followed by PLAY.
EDIT	Tape tension released, UNLOAD.
EDIT + PLAY	Dump mode.
<<-- or -->> + EDIT	Variable wind speed. Set wind speed with VARI WIND potentiometer.
EDIT in UNLOAD	Roller blind function. Terminated by any button

TAPE SPEED CONTROLS:	FUNCTION:
TAPE SPEED SELECTOR:	Selects nominal tape speed 3 3/4, 7 1/2 or 15 ips (9.5, 19.05 or 38.1 cm/s).

TAPE TIMER:	FUNCTION:
TAPE TIMER DISPLAY:	Show tape position in +/- Hour, minutes and seconds correct at each tape speed.
ON/OFF:	Tape timer can at any time be switched off. Particularly useful during editing.
RESET:	Tape timer can at any time be reset to 0.00.00.

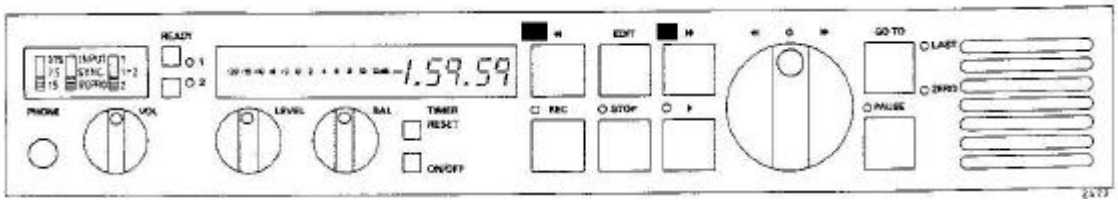

RECORD CONTROLS:	FUNCTION:
PPM LEVEL INDICATOR:	PPM audio level meter. Meter follows monitor selection INPUT - SYNC - REPRO.
READY:	Sets selected track to SAFE or READY. In SAFE mode track is protected against unwanted recording, also in RECORD mode. Track in READY will go into RECORD when both RECORD and PLAY buttons are pressed simultaneously. On stereo machines any of the two READY buttons will control both tracks.
RECORD LEVEL:	Stereo level control for incoming audio signal.
RECORD BALANCE:	Stereo balance control for incoming audio signal.

MONITOR:	FUNCTION:
MONITOR LEVEL:	Sets monitor level for the built in loudspeaker and headphone output. Connected headphone disconnect speaker. Also set LINE OUT level in UNCAL mode.
TRACK SELECTOR	Allows monitoring of track 1 or 2. 1+2 position gives stereo signal to headphone output and mono sum for loudspeaker. Does not affect line output.
INPUT/SYNC/REPRO	Selects monitor source. Also switches LINE output pending on position. See chart below.

MONITOR AND LINE OUT SIGNALS:

	MONITOR OUTPUT			XLR LINE OUTPUT		
MONITOR SOURCE SELECT:	INPUT	SYNC	REPRO	INPUT	SYNC	REPRO
STOP	Input	Sync	Repro	Input	Mute	Mute
PAUSE	Input	Sync	Repro	Input	Sync	Repro
PLAY	Input	Sync	Repro	Input	Sync	Repro
REC + PAUSE	Input	Sync	Repro	Input	Sync	Repro
RECORD	Input	Input	Repro	Input	Input	Repro
<<- / ->>	Input	Mute	Mute	Input	Mute	Mute
VARIWIND > 60 IPS	Input	Mute	Mute	Input	Sync	Repro
VARIWIND < 60 IPS	Input	Sync	Repro	Input	Sync	Repro
EDIT (UNLOAD)	Input	Mute	Mute	Input	Mute	Mute
EDIT + EDIT	Input	Sync	Repro	Input	Sync	Repro

Note: The monitor signal is muted in Variwind mode when the tape reaches 60 ips.

5.2 SWITCHING ON

Connect the mains cable to the appropriate voltage and press the MAINS ON-OFF button on the tape deck. The STOP button on the tapedeck will light up with flashing light to indicate UNLOAD mode. The tape timer is reset to zero reading. Record amplifiers set to SAFE mode.

5.3 TAPE SPEED

Select tape speed with the speed selector. Tape speed can be changed at any time in any mode.

5.4 REEL TYPES

The reel platforms accepts CINE type reels up to 300 mm diameter. Adapters are available for both NAB and DIN/AEG type reels. The reel platforms are compatible with most adapters available on the market.

5.5 LOADING TAPE

Place an empty reel and a full reel on the appropriate hubs. The black knob on top of the hub should be lifted and turned to lock the reels in place. Lace the tape through the tape path. Press STOP (or ANY tape deck command) to activate tape tension.

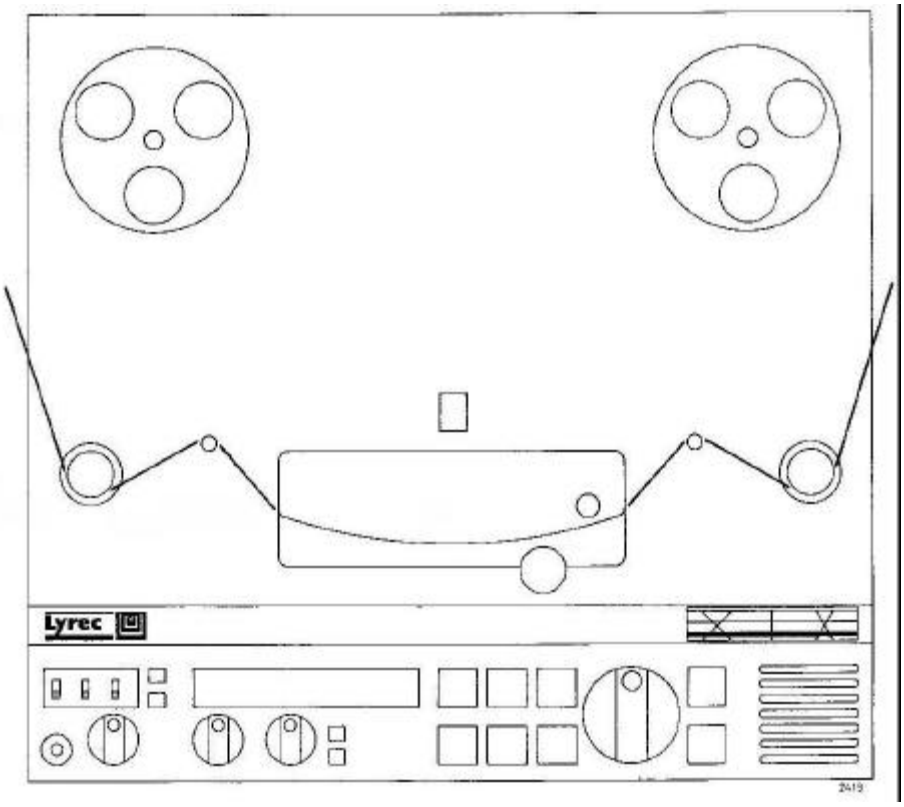

5.6 IF THE TAPE IS NOT PROPERLY LOADED

If the tape is not properly loaded and positioned in the tape path in front of the tape presence sensor, the tape transport logic will not accept commands in the normal way.

If the tape is laced loosely ANY tape transport push-button (except EDIT) can be depressed to activate tape tension and stand-by mode.

Tape slack will be slowly absorbed by the supply reel and tape tension will be activated and the machine will go to STOP mode. Press selected button again to enter function.

OR:

Press ANY button and keep it depressed until machine has entered selected function.

5.7 PLAY MODE - PAUSE MODE

Press the PLAY button; the pinchroller will pull in gently, placing the tape in contact with the heads and the capstan, which will cause the tape to move forward at selected speed.

The tape timer will begin to show elapsed play time. Select REPRO or SYNC for those channels from which the tape playback signal is to be monitored.

PAUSE mode parks the pinchroller close the capstan to allow for a faster start up.

PAUSE mode can be entered from STOP, PLAY, or WIND.

When active, PAUSE acts as a toggle between PAUSE and PLAY. PAUSE mode is indicated with a LED indicator.

5.8 RECORD MODE

Select the channels to be recorded by pressing the READY buttons on the appropriate channels; the red LED,s will immediately begin flashing to indicate that these channels are ready to record.

On stereo machines any of the two READY buttons will control both tracks.

Press RECORD and PLAY buttons simultaneously, The same mechanical functions as in PLAY mode will occur. The red flashing LED,s will illuminate steadily, indicating RECORD MODE on those channels.

The PAUSE function can be used in the same way as for play mode. RECORD can only be entered from STOP or RECORD-PAUSE mode.

5.8.1 RECORD - PAUSE MODE

The recorder can be set to RECORD STAND BY by pressing PAUSE and RECORD simultaneously. Recording can now be toggled on-off with the PAUSE button.

5.9 FAST WIND MODE, FULL SPEED

Fast wind in either direction is entered by pressing the buttons <<-- or -->>. The wind speed is servo controlled and will reach its maximum speed 480 ips (12 m/s) after a short acceleration.

5.10 VARIABLE WIND SPEED

Variable wind speed is entered by pressing -->> or <<-- together with EDIT. When active, wind speed is now continuously variable in both directions with the variwind lever. Variable wind can be entered direct from any other mode. Variable wind can be cancelled at any time by entering a new command. Maximum variable wind speed is factory set to 200 ips.

ARCHIVE WIND

For winding of long play tape or other delicate tapes it is recommended to use the variable wind speed mode to achieve a good winding quality.

5.11 TAPE END AUTO STOP

Tape end is sensed by both the left tape arm and the opto sensor mounted in the headblock.

5.12 EDIT MODE

Pressing EDIT will release tape tension and activate the mechanical parking brakes, UNLOAD mode.

Pressing EDIT in UNLOAD mode will allow the possibility to handle the tape manually over the heads and with back tension on.

This "roller blind" function is useful during editing. When tape is released (sensed by left arm) back tension goes off. It is also possible to do a temporary dump at nominal speed by manually pressing the pinchroller towards the capstan.

Pressing STOP or any other button will return to normal UNLOAD mode.

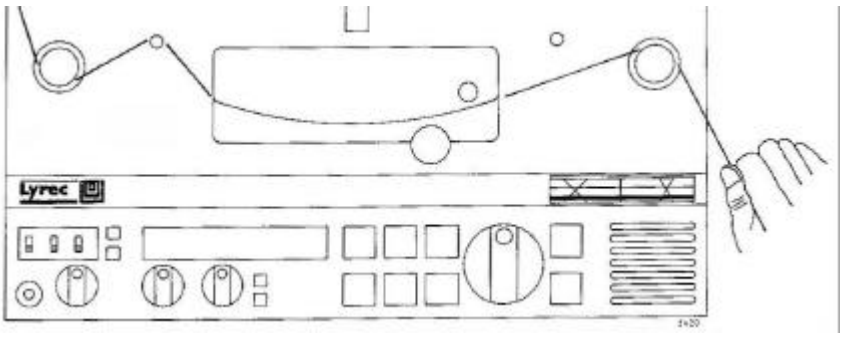

5.13 STOP MODE

Pressing the STOP button immediately interrupts the PLAY or RECORD modes. In both cases the tape motion is immediately halted.

Coming from the RECORD mode, the electronics are also switched to READY mode. When coming from the FAST WIND mode, dynamic brakes are applied to slow the reels and when the tape motion sensor indicates that the tape is halted the tape tension is kept by electronic control of the reel motors.

5.14 TAPE DECK LOGIC

The tape deck servo system and logic is so designed as to avoid throwing tape loops or causing spills, jerks or other situations dangerous to the tape. It is possible to go direct from any mode to another without going through stop.

5.15 EDITING FACILITIES

In the PAUSE mode the audio amplifiers are de-muted and the signal from the tape can be monitored by rocking the reels by one hand.

In PAUSE and STOP mode the reels can be rocked manually with the supply or take up reel. The other reel will automatically follow.

5.16 RECORD INDICATION OUTPUT

A control signal is provided in the remote connector which supplies +5 V from each individual audio channel when it goes into RECORD mode, enabling external equipment functions to be controlled (i.e. noise reduction units).

5.17 MUTING

To protect your speakers there is an electronic MUTING on the LINE OUTPUT.

Provided the MONITOR selector is in TAPE position the LINE outputs are muted in STOP and WIND modes.
When going from STOP to PLAY or RECORD the outputs are muting during acceleration until the tape has reached nominal speed.

The muting in STOP can be cancelled by pressing the PAUSE button.

5.18 DROP IN / DROP OUT DELAY

When entering RECORD an electronic delay circuit automatically compensates for the distance between the erase and record heads. This eliminates overlapping signals at drop in and silent "holes" at drop out.

5.19 TAPE TIMER

The tape timer displays hours, minutes and seconds in relation to selected tape speed. When tape speed is changed, the tape timer automatically displays correct value in relation to tape length.

The tape timer has one memory for each tape speed. All three memories are constantly updated. This means that no timer information is lost or altered due to internal re calculations after speed changes.

When the timer display exceeds +/- 1.59.59 the first "hour" digit will flash. The memory, however, will always keep the correct value up to 3.59.59.

5.19.1 TIMER RESET - TIMER ON/OFF

The tape timer can be RESET at any time.

If RESET is pressed during a GO TO sequence, the command will be ignored.

The tape timer can at any time be switched OFF. This is indicated by flashing display.

If tape timer is switched off during a GO TO sequence, this will be ignored.

5.20 GO TO - LAST PLAY and GO TO ZERO

Pressing GO TO once will interrupt the present tapedeck mode and start a fast wind in order to bring TAPE POSITION equal to the last PLAY (or RECORD) position. When this is obtained the GO TO mode is terminated with a STOP-command.

A LAST reference flag is only set if PLAY (or RECORD) is entered from STOP mode.

Pressing GO TO twice will interrupt the present tapedeck mode and start a fast wind in order to bring TAPE POSITION equal to 0.00.00 position. When this is obtained the GO TO mode is terminated with a STOP-command.

If PLAY or PAUSE is pressed during the GO TO sequence, it will be terminated with a PLAY or PAUSE command.

GO TO mode may be aborted at any time by pressing STOP or WIND.

The GO TO feature is not operational when the tape timer is switched OFF. If timer is switched OFF during a GO TO sequence, the tape deck will stop.

5.21 RECORD CONTROL

The record-side of the amplifier can be in three states:

SAFE: READY LED off. The track will NEVER start recording, independent of tapedeck status.

READY: Flashing red LED in READY-key. The recorder will start recording next time PLAY and RECORD are pressed simultaneously.

NOTE: RECORD can only be entered from STOP or RECORD-PAUSE modes.

RECORD: Steady red LED in READY-key. The track is recording.

The READY button acts as a toggle function between SAFE and READY.

Pressing READY will bring the track to READY-state if it was in SAFE. Pressing START and REC will bring the track to RECORD if it was in READY-state. Otherwise no effect.

Terminating tapedeck RECORD-mode (pressing STOP, WIND, GO TO or STOP while PLAY is held down) will bring tracks in RECORD-state to READY-state. Otherwise no effect.

To review the DROP-IN/DROP-OUT possibilities:

A track will drop into record, when PLAY and REC are pressed simultaneously, if that track was selected to READY before pressing.

Selecting a track to READY while the tape deck is in RECORD-mode will make it start recording on this track. This will cause both bias and erase to switch on simultaneously, thus overriding the drop in delay.

DROP-OUT can be done in several ways:

- Pressing STOP (WIND or GO TO). Tracks in RECORD will go to READY.

- Pressing STOP while PLAY is held down. Tracks in RECORD will go to READY, tape movement not disturbed.

- Pressing individual SAFE. That track will go to SAFE-state, the tape continues. This will cause both bias and erase to switch off simultaneously, thus overriding the drop out delay.

5.22 MONITOR AND LINE OUT SIGNALS

	MONITOR OUTPUT			XLR LINE OUTPUT		
MONITOR SOURCE SELECT:	INPUT	SYNC	REPRO	INPUT	SYNC	REPRO
STOP	Input	Sync	Repro	Input	Mute	Mute
PAUSE	Input	Sync	Repro	Input	Sync	Repro
PLAY	Input	Sync	Repro	Input	Sync	Repro
REC + PAUSE	Input	Sync	Repro	Input	Sync	Repro
RECORD	Input	Input	Repro	Input	Input	Repro
<<- / ->>	Input	Mute	Mute	Input	Mute	Mute
VARIWIND > 60 IPS	Input	Mute	Mute	Input	Sync	Repro
VARIWIND < 60 IPS	Input	Sync	Repro	Input	Sync	Repro
EDIT (UNLOAD)	Input	Mute	Mute	Input	Mute	Mute
EDIT + EDIT	Input	Sync	Repro	Input	Sync	Repro

Note: The monitor signal is muted in Variwind mode when the tape reaches 60 ips.

5.23 POWER-ON CONDITIONS

When power is applied the recorder will be in the following condition: Both amplifiers in SAFE mode.

5.24 HEADPHONES

Headphones are connected to the 1/4" stereo socket on the front panel. When connected, the headphones automatically disconnects the internal loudspeaker. The headphone output can also be used as an unbalanced line output with variable level when the line output is set to fixed preset level.

5.25 LOUDSPEAKER

The amplifier driving the cue loudspeaker is equalised to give maximum clarity.

5.26 FADER START

The fader switch is connected to pins 1 and 12 in the remote connector. The fader start function can be jumper selected for make or break contact. If jumper selector is removed, no fader start is possible.

Before using fader start, cue up the tape and leave the machine in PAUSE mode. The next time the fader is lifter the machine will go into play mode.

At fader down the machine will go to STOP mode and can not be fader started again.

For a new fader start, again cue up the tape and leave the machine in PAUSE mode.

When tape has been loaded and put in PAUSE mode the machine can be armed by switching off the keyboard and or the remote control.

A modification of the fader start function is described in application note 10.2

5.27 OPERATION; SECONDARY CONTROLS

Secondary controls are located below the hinged flap just above the control panel.

INPUT CAL/VAR	CAL selects fixed input level as adjusted individually for each speed and track with the trimmers on the far left. VAR selects variable input level controlled by the LEVEL and BALANCE controls on the frontpanel.
OUTPUT CAL/VAR	CAL selects fixed output level as adjusted individually for each speed and track with the trimmers on the far left. VAR selects variable output level controlled by the VOLUME control on the front panel.
EQ NAB/CCIR	Selector for record/playback equalisation.
MONO/STEREO	For selection of MONO playback only. In MONO, both tracks are summed and routed to both ch1 and ch2 outputs.
DISPLAY TIMER/SPEED	Normally set to TIMER mode. In SPEED mode, the display will show actual tape speed in inch per second as sensed by the left tape guide roller. Maximum speed reading is 99.99 ips.
LOCAL ON/OFF	ON allows normal operation of the front panel controls. OFF disconnects all front panel tape deck controls and only allows control over the remote connector or fader start.
REMOTE ON/OFF	ON allows control over the remote connector. OFF disables any connected remote control or synchroniser operation. Only the fader start function remains active.
FADER START MAKE/BREAK	Jumper selector to active fader start from either a make or break contact. Connect fader start switch between pin 1 and 12 in the remote connector. If make/break jumper is removed no fader start is possible. Fader start is possible also when the REMOTE and/or the KEYBOARD selector is in OFF position.

6.1 BUILT IN USER OPTIONS

6.1.1 PPM METER 0-DEFLECTION

Adjustable on the monitor board to suit individual settings. See service manual section 7.2.7

6.2 ADD ON OPTIONS - ACCESSORIES

6.2.1 TAPE CUTTER

A built in tape cutter can be mounted in the headblock close to the playback head. The tape cutter has a cutting angle of 60 degrees.

6.2.2 REEL ADAPTERS

The reel platforms accepts CINE type reels. Adapters are available for both NAB and DIN/AEG type reels.

Part # 962211 NAB Adapter.
Part # 501164 AEG/DIN adapter with 295 mm platter.

6.2.3 RACK MOUNTING KIT

Part # 455511
Rack mounting brackets are mounted with a single screw after removing the carrying handle. The brackets are symmetrical and can be fitted for mounting the tape deck flush with the rack or protruding 25 mm.

Note: The rack mounting brackets are fixed at the rear end only and positioned with a tap in the front end.
If machine is carried using the brackets as handles make sure they are pressed towards the machine frame.

6.2.4 FLIGHTCASE

Part # 960452
For transport a strong fibreglass flightcase is available. The outer dimension of the case is 55 x 51 x 20 cm. Weight 5.5 kg.

6.2.5 MODIFICATION OF FADER START FUNCTION

The function of the fader start can be modified to the following:

Fader down: The recorder is completely normal
Fader up: Frida goes into play mode from any mode.
If tape was unloaded, tape tension will be established (slow take up) followed by play.

Local panel goes OFF (disabled). Machine locked in play mode. Can only be stopped by pulling down fader or controlled by an installed parallel remote control. If in wind mode, fader up will make Frida slow down and go into play mode.

If in search mode, a fader up will be ignored until search position has been reached when Frida will go into play mode.

Fader down: Frida stops and is again normal. Local panel again ON and working.

A detailed description of the modification is found in application note 10.2

7 ADJUSTMENTS

7.1 ACCESS TO SERVICE POINTS

Primary adjustment points (audio) are located with direct access when the machine is installed in rack or console. Other adjustments require that one or more of the metal covers are removed.

7.1.1 DIRECT ACCESS

All audio adjustments are immediately accessible below the front panel flap.

Headblock cover can be removed for access to azimuth adjustment.

7.1.2 ACCESS TO TAPE TRANSPORT LOGIC

Loosen the three screws on the sloping bottom cover. Slide cover off for access to tape deck logic adjustment, test points and indicator LED's.

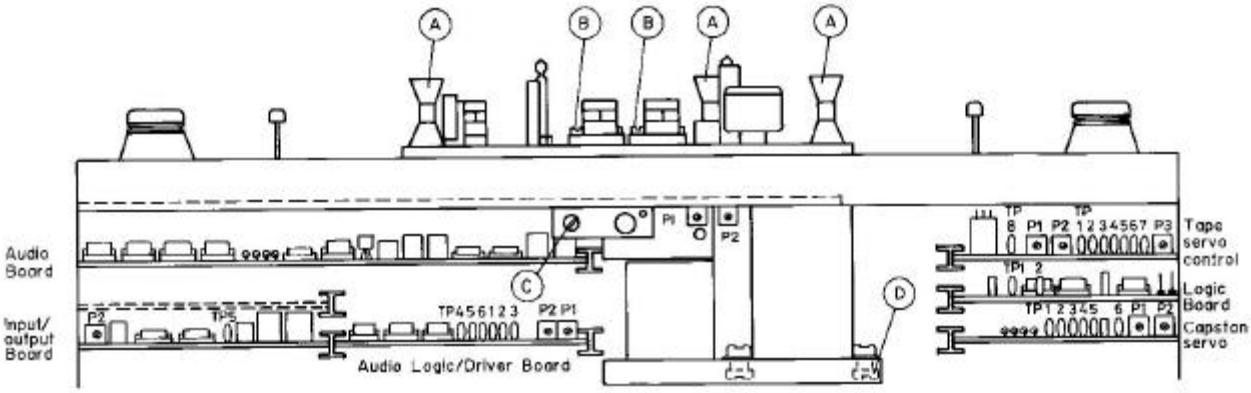

Mecanical Adjustments.

- (A) Tape Height
- (B) Azimuth
- (C) Pinch Roller Pressure 600-700gr.
- (D) Capstan Belt Tension

Electrical Adjustments.

Audio Logic/Driver board:

- P1 Tape lift stop pos.
- P2 Pinch Roller pause pos.

Note: Adjust P1 first.

Monitor board:

- P1 PPM level Ch.1
- P2 PPM level Ch.2

Tape servo control:

- P1 Supply Tension Adj. for 45g at Reel
- P2 Take up Tension, Adj. for 55g at Reel
- P3 Wind Tension, 120g at Reel.

Capstan servo:

- P1 Phase Lock adj.
- P2 Loop Gain.
- LED Lock

7.1.3 ACCESS TO KEYBOARD

To remove keyboard, open the front panel flap and loosen the 4 screws. Slide keyboard down and lift a little to remove for inspection.

7.1.4 REMOVAL OF TOP PLATE

- Remove two screws at the rear of the bottom cover plate. The screws are accessible through the two service holes.
- Open front panel flap and remove the two centre screws.
- Remove the headblock cover and remove the two screws.
- Unscrew and remove the pinchroller cover and remove pinchroller.
- Lift top plate gently in the front end and pull out backwards.

There is now free access to:

Top left:	Test points
Centre:	Erase resonance
Lower left:	Timer tach opto system supply sensor opto system
Lower right:	Take up opto sensor

7.1.5 REMOVAL OF BOTTOM PLATE

- Loosen the two screws on the sloping bottom cover.
- Remove the 8 screws holding the bottom plate.
- Loosen the two screws at the rear of the bottom cover plate. The screws are accessible through the two service holes.
- Slide the bottom plate free and remove.
- Disconnect the ventilator cable at the power supply pcb.

There is now free access to:
- Power supply
- Capstan tacho system
- Reel motor driver amps
- Ventilator

7.1.6 REMOVAL OF AUDIO AMPLIFIER

To remove the audio amplifier it is necessary to first remove the keyboard;

- Loosen the four screws under the flap of the keyboard. Slide the keyboard panel out as far as the ribbon cables allow.
- Pull out the audio amplifier about 2 cm. There is now access to remove the head cables.
- Open the lock in the right side pcb guide.
- Remove the audio amplifier.

7.1.7 REMOVAL AND INSTALLATION OF CAPSTAN UNIT

CAUTION: When handling the capstan unit care should be taken to prevent the tacho disc from becoming disturbed or contaminated with dust.

REMOVAL;
- Remove the sloping front cover.
- Remove the bottom plate according to section 7.1.5.
- Remove the head shield by simultaneously pulling left and right side of the shield away from the top plate.
- Remove the top plate according to section 7.1.4.
- Remove the two screws fixing the head mounting plate and carefully lift the plate away without disconnecting any cables.
- Disconnect the plug connecting the capstan unit to the lower PCB in the right hand side.
- From the top of the machine remove the three screws fixing the capstan unit while supporting this. The screws are located in a semi circle around the capstan shaft. Carefully remove the capstan unit.

INSTALLATION;

Installation is done by following above points in reverse order. Before re-installing the cover plates, adjust wow & flutter according to section 7.3.6. Also check that the connector to the photo reflector on the head plate has not been disconnected.

7.1.8 REMOVAL OF REEL MOTOR ASSEMBLY

Remove top and bottom plate (see 7.1.5 and 7.1.5).

The reelmotors are fixed to the chassis with 4 M3 screws. DO NOT TOUCH THE 4 LARGER M4 SCREWS.

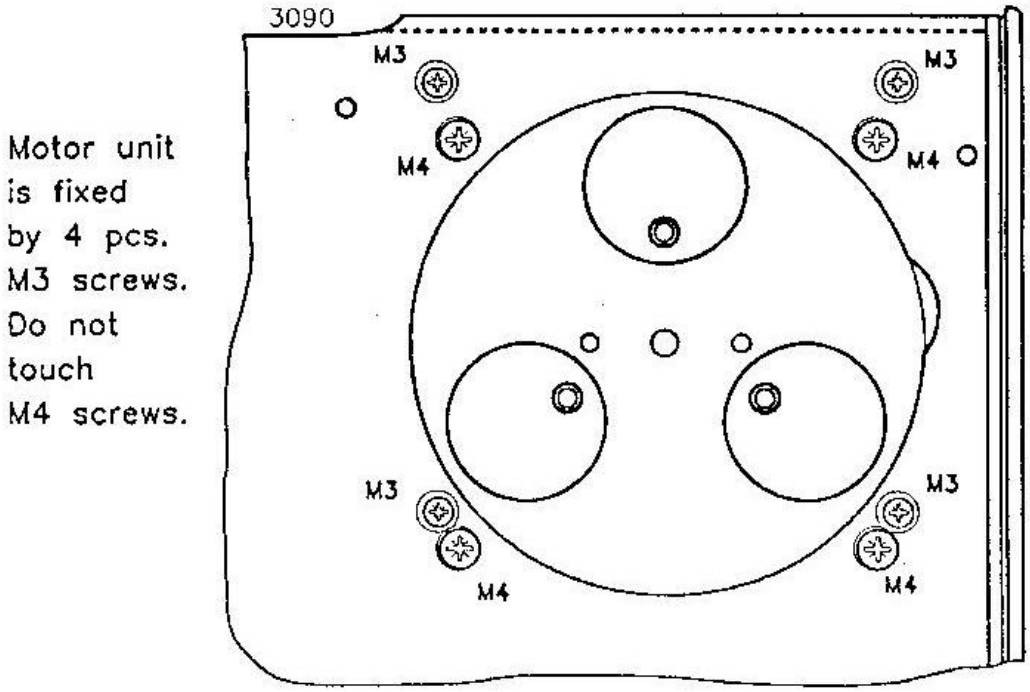

NOTE: THE REEL MOTOR IS GALVANICALLY INSULATED FROM THE CHASSIS. THE FOUR M3 SCREWS HOLDING EACH MOTOR ARE INSULATED WITH A PLASTIC BUSHING AND A FIBRE WASHER. SCREW AND WASHER ARE HELD TOGETHER WITH A RUBBER O-RING TO MAKE IT EASIER TO RE-INSTALL THE MOTOR UNIT.

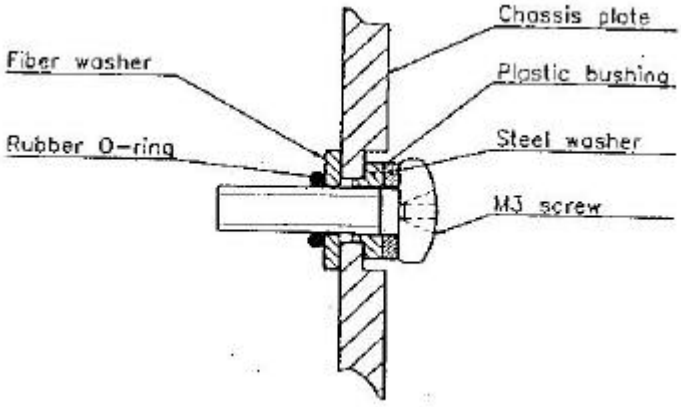

REMOVAL OF SUPPLY MOTOR

Disconnect the ribbon cable.

Loosen the four M3 screws a little one by one while supporting the motor by hand. In this way the rubber O-ring will hold screw and washer together.

Disconnect the red/black wires (+24 V) from the screw terminal on the Motor Power Amp board.

Motor unit can now be removed.

Note: The O-ring holding screws and washers together can sometimes from pressure get stuck on the motor unit. Make sure all washers and O-rings are recovered.

Before re-assembly attach the 4 screws, bushing and washer and keep them together with the O-ring. Re-assemble in reverse order. Before connecting cables, check that motor is insulated from the chassis. When connecting cables, be careful to connect the red and black 24 volt cable correctly.

REMOVAL OF TAKE UP MOTOR

Pull out the big smoothing capacitor and let it hang in its wires.

Disconnect the ribbon cable.

Disconnect the red/black wires (+24 V) from the screw terminal on the PSU board.

Loosen the four M3 screws a little one by one while supporting the motor by hand. In this way the rubber O-ring will hold screw and washer together.

Motor unit can now be removed.

Note: The O-ring holding screws and washers together can sometimes from pressure get stuck on the motor unit. Make sure all washers and O-rings are recovered.

Before re-assembly attach the 4 screws, bushing and washer and keep them together with the O-ring. Re-assemble in reverse order. Before connecting cables, check that motor is insulated from the chassis. When connecting cables, be careful to connect the red and black 24 volt cable correctly.

APPLICATION NOTE

ACOUSTIC NOISE

The Frida recorder generates some acoustic noise in different operating modes.

The noise originates from 3 different sources;

a/ The capstan motor system.
b/ The ventilator
c/ The tape path.

a/
A capstan motor assembly has been developed to produce a minimum of acoustic noise.

The following has been changed;

- Motor equipped with a new type of bearing.

- A silicon belt is mounted on top of the capstan belt. This eliminates belt noise at higher tape speeds.

- Motor and capstan shaft is mounted on a new plate which wraps around and therefore seals off acoustic noise.

- All cavities and cable outlet sealed with silicon.

- To get the full benefit of the new motor assembly the rubber strips shall be mounted on the two bottom covers so that the edges of the motor housing is sealed. Make careful measurements so the rubber strips gets the proper position and do not obstruct the tacho disk.

b/
The ventilator generates a little noise from the motor and the turbulence it creates.

The ventilator can without harm to the recorder be disconnected if the recorder is located in a room with room temperature not exceeding 30* C.

c/
The noise created in the tape path is dependent on the tape type being used.

7.2 AUDIO ADJUSTMENT PROCEDURE

The adjustment procedure to be described allows the user to adjust the stereo RECORD-PLAYBACK AMPLIFIER so that the frequency versus amplitude record-playback response of the machine is within specification.

Because the machine is adaptable to any reasonable standard, no specific TEST TAPE LEVEL (TTL) or STUDIO LINE LEVEL (SLL) will be defined. In each particular case the user may substitute these terms for his own working levels, and the actual levels in each machine are stated in the test report.

The adjustment will only be described for one speed (15 ips) since the procedure is identical for the three speeds. It is assumed that the heads have been demagnetised and azimuth adjusted properly.

7.2.1 PLAYBACK (REPRO) LEVEL ADJUSTMENT

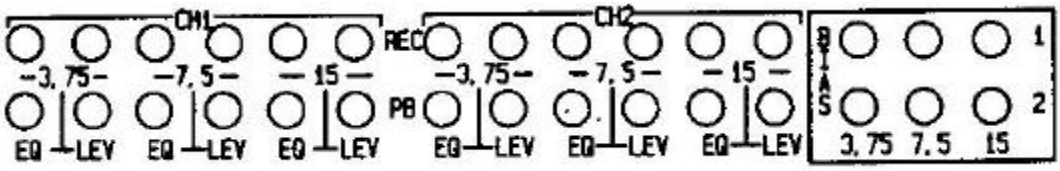

1. Load test tape. Make sure that both channels are in SAFE mode. Connect voltmeter to LINE OUT of channel to be adjusted, and switch it to REPRO mode.

2. Go to PLAY at the level adjust section of the test tape.

3. Adjust LEVEL, for the proper track and speed to SLL +/- the correction found in table 1.

TEST TAPE MAGNETISATION (nWb/m)

Desired Magnetisation at SLL (nWb/m)	185	200	250	320
185	0	+0.7	+1.4	+4.8
200	-0.7	0	+1.9	+4.1
250	-1.4	-1.9	0	+2.1
320	-4.8	-4.1	-2.1	0
510	-8.8	-8.1	-6.2	-4

Table 1.

Correction in dB from Studio Line Level to Test Tape Level.

7.2.2 AUDIO AMPLIFIER BLOCK DIAGRAM Diagram 2378

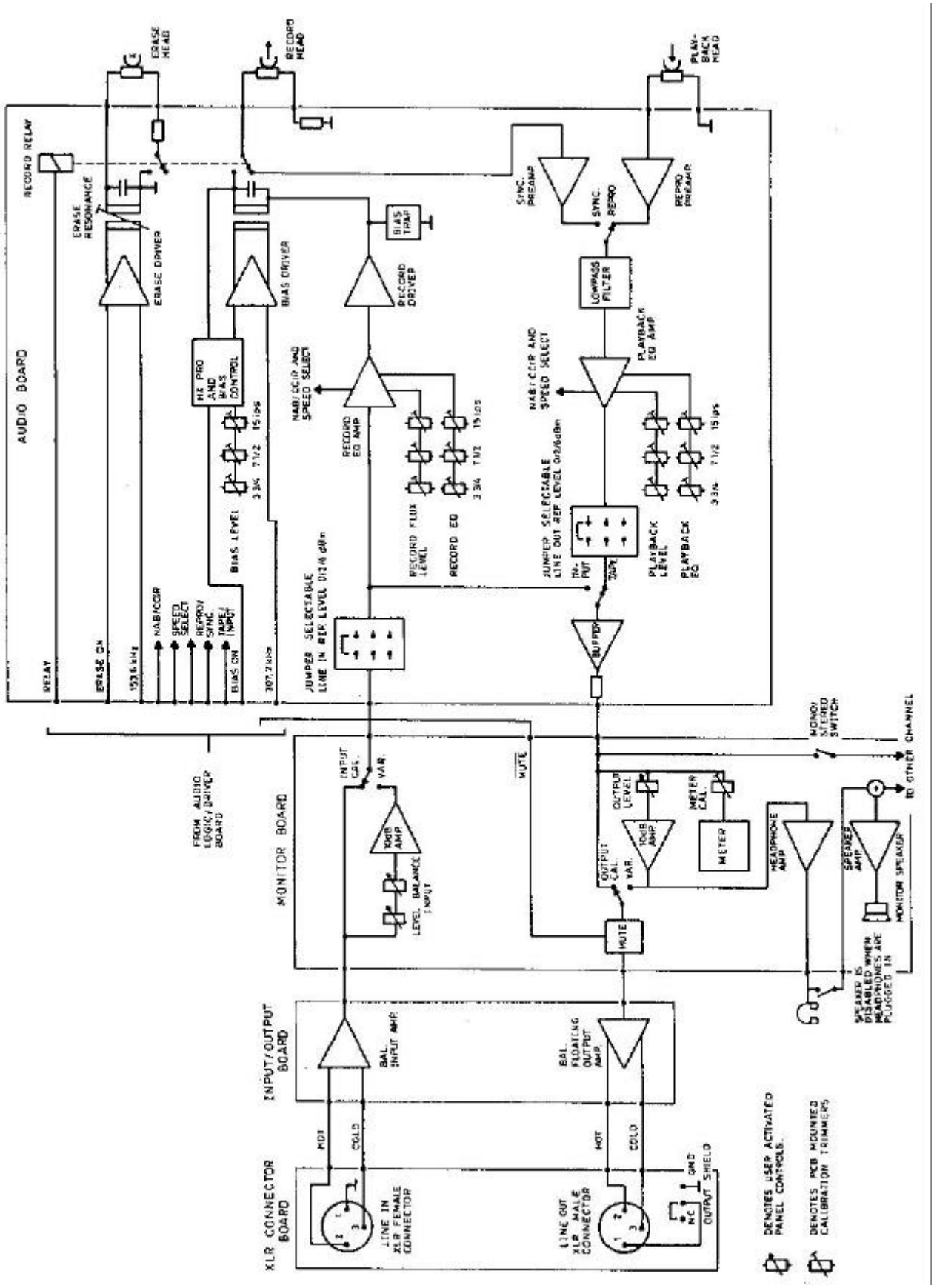

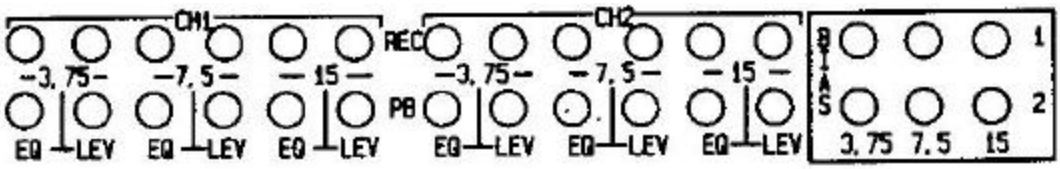

7.2.3 PLAYBACK FREQUENCY RESPONSE ADJUSTMENT

a. Go to the frequency response section of the test tape. Select PLAY.

b. Note the level of the 1 kHz tone. Normally 10 or 20 dB below TTL level.

c. Adjust EQ, so that the 18 kHz tone is equal in level to the 1 kHz tone (At 7.5 ips: 18 kHz, at 3 75 ips: 16 kHz).

7.2.4 BIAS ADJUSTMENT

1. Place a blank reel of tape on the machine. Select the channel under adjustment to READY and select RECORD.

2. Turn the proper BIAS potentiometer fully anti-clockwise.

3. Connect AC voltmeter to LINE OUT and select REPRO. Feed a 10 kHz signal approx. 20 dB below SLL to LINE IN (Use 10 kHz signal for all three tape speeds).

4. Slowly turn the BIAS potentiometer clockwise and watch the LINE OUT level rise to a maximum value, after which it will drop with increasing bias current. Continue until this drop (due to self erasing) is approx. 3 dB (at 15 ips) in relation to the maximum value.

Suggested bias levels:	15	7 1/2	3 3/4 ips
AGFA PER 528	-3.5	-5.5	-5.5 dB
AGFA PER 468	-3.5	-5.5	-5.5 dB
BASF LGR 50	-3.5	-5.5	-5.5 dB
AMPEX 478	-3.5	-5.5	-5.5 dB
ZONAL 675	-3.5	-5.5	-5.5 dB
MAXELL UD35	-6	-7.5	-8 dB

NOTE 1: The suggested bias setting is related to the gap of the record head and may not correspond to values suitable for other recorders.

NOTE 2: For optimum result the "overbias" may vary according to the type of tape used. If in doubt, refer to the tape manufacturers specifications.

7.2.5 RECORD LEVEL ADJUSTMENT

1. Still with the blank tape and recording on the channel under adjustment, feed 1 kHz at SLL to LINE IN (At 7 1/2 ips 1 kHz, at 3 3/4 ips 315 Hz).

2. With voltmeter at LINE OUT, and REPRO selected, adjust REC LEVEL, to read SLL on the voltmeter.

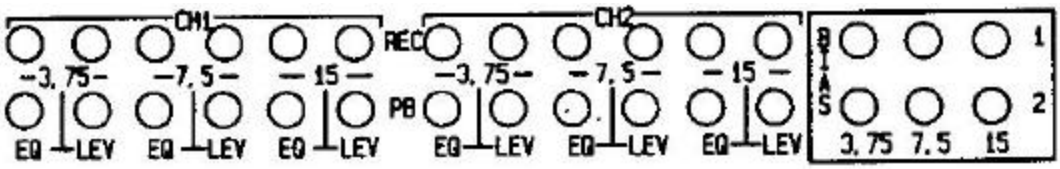

7.2.6 RECORD - PLAYBACK FREQUENCY RESPONSE

3. Feed 1 kHz at -20 dB (below SLL) to LINE IN. Note the LINE OUT level.

4. Feed in 15 kHz, same level, to LINE IN. Adjust EQ to obtain the same level at LINE OUT as at 1 kHz (The same frequency also used for 7 1/2 and 3 3/4 ips).

5. Check that the response at 1 kHz has not been affected. If necessary, readjust level.

7.2.7 PPM - METER DEFLECTION Drawing 2491

Adjustment of PPM meter reading is accessible on the lower side of the keyboard panel and accessible when the sloping bottom cover is removed.

Feed in 1 kHz at SLL and set the monitor source selector to INPUT. Adjust P1 (Ch1) and P2 (Ch2) for 0 reading.

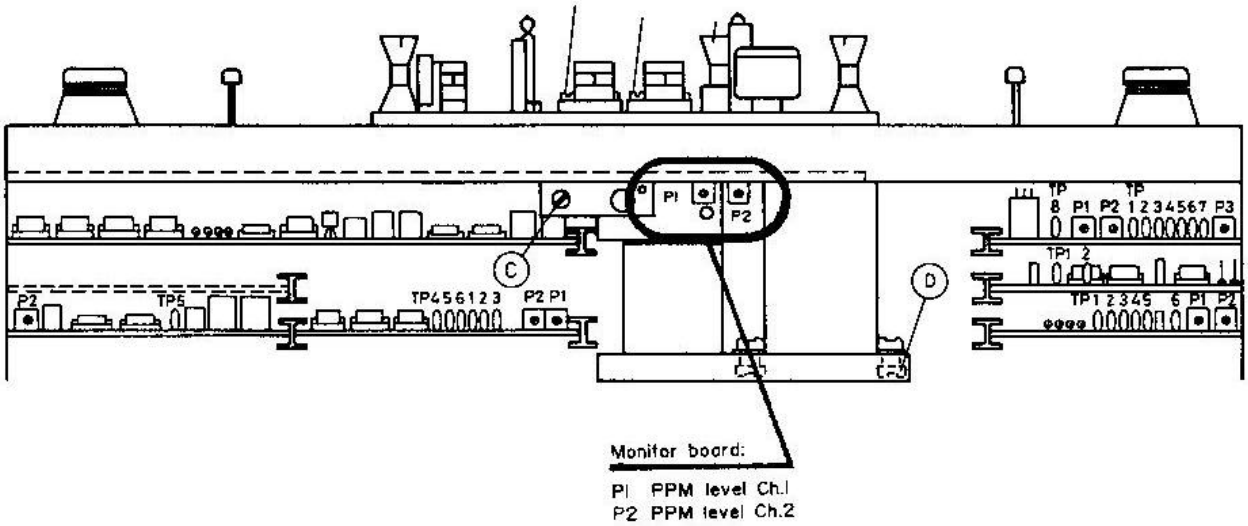

7.2.8 ERASE ADJUSTMENT

Diagram 2379/5
Drawing 2379/6

The erase resonance adjustment is factory set and shall under normal conditions only be readjusted when the erase head has been replaced.

To get access to the erase adjustment it is necessary to remove the tape deck top cover. The erase trimmers can now be reached through two holes in the deck plate just to the left of the mains switch.

Adjustment for stereo machines with full track erase heads is made with the left trimmer. In this case the right trimmer is not mounted.

Adjustment for two track machines with split erase heads is made with the left trimmer for Ch1 and the right trimmer for Ch2.

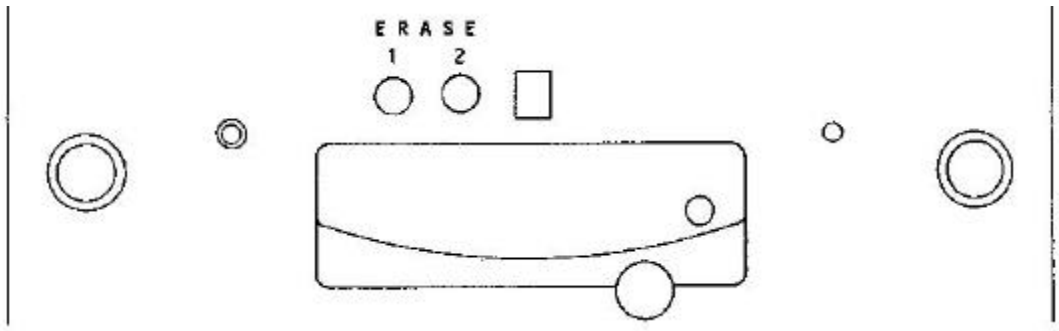

Remove the front panel keyboard by loosening the four screws under the flap. Connect oscilloscope to testpoint for channel under adjustment, TP6 (Ch1) or TP7 (Ch2) and ground to TP5. The testpoints are located on the audio amplifier, just behind the bias trimmers.

In RECORD mode, adjust for maximum erase current.

This method ensures optimum erasing also at low frequencies.

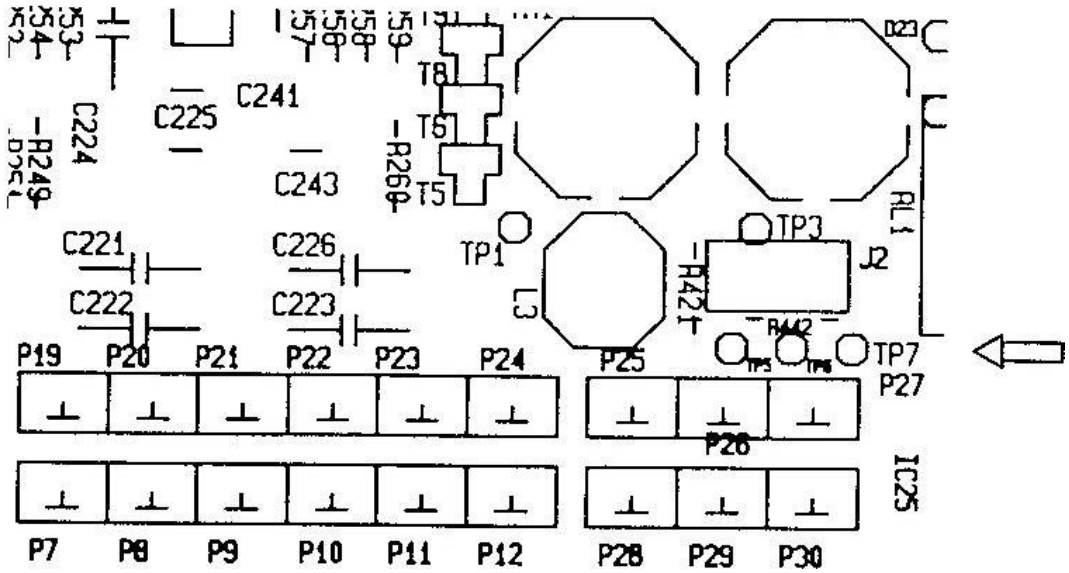

7.3 BASIC TAPE TRANSPORT ADJUSTMENTS

PREFERRED SEQUENCE OF ADJUSTMENT;

1 Pinchroller pressure
2 Tape guide height adjustment
3 Tape tension, static adjustment
4 Tape tension, dynamic adjustment
5 Tape lift height, stop and pause mode
6 Wow & flutter
7 Tape timer pulses.
8 Audio adjustments, azimuth
9 Audio adjustments, play
10 Audio adjustments, record

7.3.1 PINCHROLLER PRESSURE Drawing 2491

Unscrew the pinchroller top cover and attach a spring balance to centre hole. With tape running, slowly pull back on the spring balance until the tape stops. The reading shall be 600-700 grams. Adjustments is made with screw C.

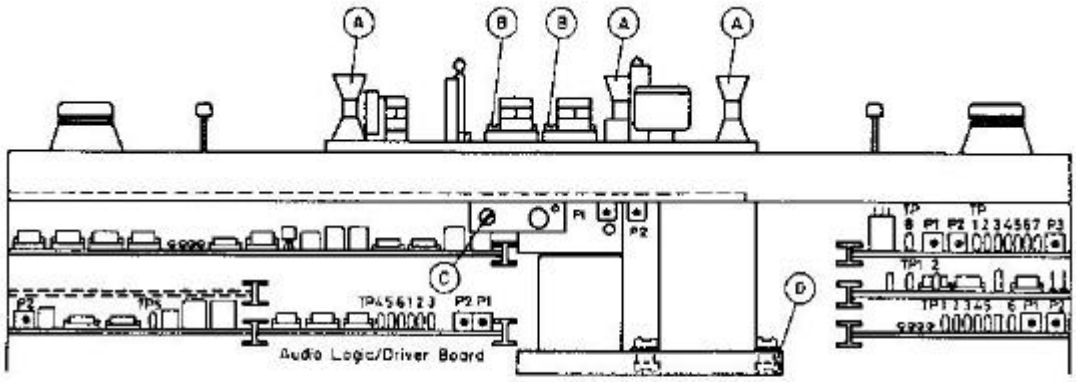

Meconical Adjustments.

Ⓐ Tape Height
Ⓑ Azimuth
Ⓒ Pinch Roller
Pressure 600-700gr.

7.3.3 TAPE TENSION, STATIC ADJUSTMENT

Attach a spring balance to the supply servo arm. Slowly pull back on the spring balance until the servo arm is in it's mechanical centre position. The reading shall now be 30 grams. Adjust by moving the spring.

Repeat procedure for the take up servo arm.

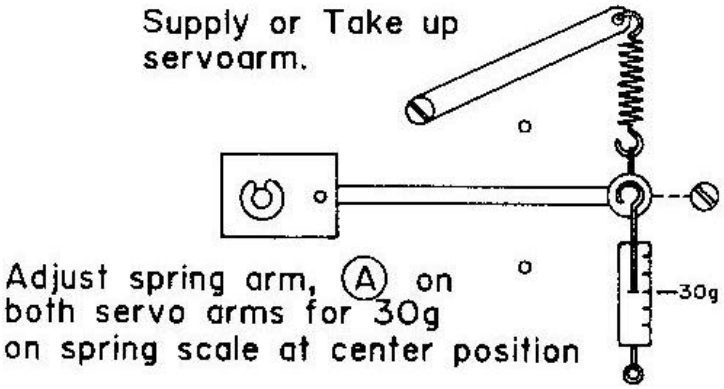

7.3.4 TAPE TENSION, DYNAMIC ADJUSTMENT

Tape Servo Control Board
Diagram 2388
Drawing 2491

Attach tape tension meter between supply reel and first tape guide roller. With machine in play mode, adjust P1 on Tape Servo Control Board for a reading of 45 grams.

Attach tape tension meter between last tape guide roller and take up reel. With machine in play mode, adjust P2 on Tape Servo Control Board for a reading of 55 grams.

This method results in approx. 80 grams tension over the heads in play mode.

With tape tension meter still on take up side, go to Fast Forward mode and adjust wind tension with P3 for a reading of 120 grams.

7.3.5 TAPE LIFT HEIGHT, STOP AND PAUSE MODE

Audio Logic Driver Board
Diagram 2384
Drawing 2491

Stop mode. Adjust the tape lifter with P1 on the Audio Logic-Driver Board so that the tape lifter is 0.5 mm from the tape.

Go to PAUSE mode and adjust P2 until the pinchroller rests 0.5-1 mm from the capstan shaft.

NOTE: P1 must be adjusted before P2.

7.3.6 WOW & FLUTTER

Capstan Servo Board
Diagram 2389
Drawing 2491

Connect wow & flutter meter. Connect an oscilloscope to testpoint TP1 on the Capstan Servo Board with the probe in 10-time mode (ground to TP6).

Set P2 to approximately mechanical centre position.
Adjust P1 to achieve shape shown below. The capstan lock LED should now light up.

Turn P2 fully clockwise. Slowly turn anti-clockwise until the linear w&f starts to increase. If w&f meter is not available, leave P2 in mechanical centre position.

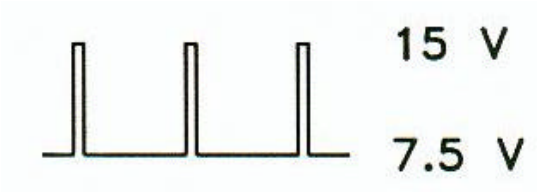

7.3.7 TAPE TIMER PULSES

Tape Timer Logic Sensor
Diagram 2395

The Tape Timer Logic Sensor is mounted together with the supply tape guide roller. Remove the tape deck top plate to get access.

Connect oscilloscope to testpoint TP0 and adjust P1 for a 50/50 duty cycle with machine in play mode. Repeat procedure at test-point TP1 and adjust P2 for 50/50 duty cycle.

ADJUST:

P1 FOR ON TP0

P2 FOR ON TP1

DUTY CYCLE = 50%

NOTE: IT IS OF VITAL IMPORTANCE THAT THE TIMER PULSES ARE CORRECTLY ADJUSTED. MISADJUSTMENT NOT ONLY AFFECT THE TAPE TIMER BUT ALSO THE TAPE DECK LOGIC AND CAN CAUSE THE RECORDER TO BEHAVE ERRATIC.

7.3.8 DRIVE BELT TENSION

Remove the bottom plate to get access to the motor assembly.

Without tape, select 15 ips tape speed and press EDIT.

This will activate the capstan motor and set the pinchroller to PAUSE position.

Manually stop the large idler (be careful not to damage the tacho disk) and observe the drive motor;

- If the motor stops within half to one turn the tension is correct.
- If the motor continues to run, the belt is too loose.
- If the motor stops immediately, the belt is too tight.

Adjustment is made by loosening screw D and turning the motor plate.

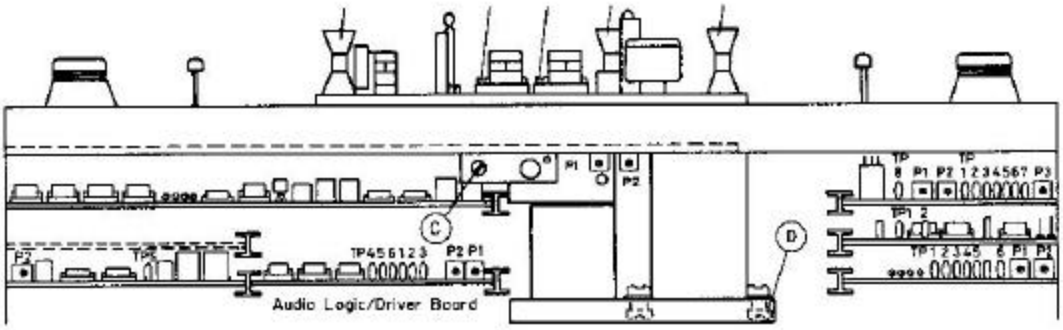

D Capstan Belt Tension

IF CAPSTAN MOTOR HAS BEEN REPLACED

Loosen the screw holding the motor. Slowly turn the motor to obtain the position where the motor produces minimum acoustical noise. Tighten the screw.

Check belt tension as described above.

General: When taking pcb in and out, be careful not to press on trimmers which might break.

CUSTOMISING

RECORD PLAYBACK LEVELS

AUDIO BOARD JUMPERS 1-12 allows an 2 or 6 dB boost individually for record and playback on each track.

JUMPER:

1	sets playback level Ch 1 to	0 dB default for + 6 dBm output
2		+2 dB boost
3		+6 dB boost
4	sets playback level Ch 2 to	0 dB default for + 6 dBm output
5		+2 dB boost
6		+6 dB boost
7	sets record level to Ch 1	0 dB default for +6 dBm output
8		+2 dB boost
9		+6 dB boost
10	sets record level to Ch 2	0 dB default for +6 dBm output
11		+2 dB boost
12		+6 dB boost

VARI WIND SPEED

Diagram 2388

The maximum variwind speed is factory set to 200 ips.

With jumper JM1 on the Tape Servo Control board the the variwind speed can be increased to 480 ips. Other speed limits can be set by changing value of resistor R49 as indicated in the diagram.

8 SERVICE

8.1 Running the SELF TEST FUNCTIONS:

8.1.1 The SELF TEST FUNCTIONS in general:

The SELF TEST consist of special programs located both in the KEYBOARD CONTROL SYSTEM and in the MASTER CONTROL SYSTEM (Logic board).

The SELF TEST FUNCTIONS are ALWAYS activated from the KEYBOARD CONTROL SYSTEM.

The self test functions have been divided in three parts (PART-1, PART-2 and PART-3).

8.1.2 The SELF TEST STARTING PROCEDURE:

1: Remove any tape from the machine, and switch the power OFF.

2: Make sure that the "LOCAL KEYBOARD"- selector (underneath the flap) is in position "ON".

3: With the tip of a pen or metal object, short circuit the two pins at jumper JM2 while switching power ON.

   JM2 is located in the right side of the circuit board, located underneath the flap and labelled "uP TEST".

4: Remove the connection between the "JM2" terminals.
   The machine is now running a SELF TEST FUNCTION. The type of function activated, depends upon the setting of the selectors "DISPLAY" and "REMOTE KEYBOARD", both located under the flap.

8.1.3 The primary FUNCTIONS of the SELF TEST:

PART-1: A complete local test of all control keys, the timer display, and the LED indicators.

PART-2: A test of the SERIAL TRANSMISSION SYSTEM between the keyboard and the logic board.

PART-3: A special set of service functions. Different control-signals, motors and the pinchroller/tape lift system can be activated, without having tape loaded on the machine.

8.1.4 To SELECT and EXECUTE SELF TEST PART-1:

To select SELF TEST PART-1, set the selectors underneath the flap to:

"DISPLAY"....." TIMER "

"REMOTE KEYBOARD"....." ON "

THEN: PERFORM THE "SELF TEST START PROCEDURE".

OR: In case that the machine was already running SELF TEST PART-2 or PART-3, then just position the selectors as described for running PART-1. (In this situation the START PROCEDURE is NOT needed).

NOTE ! If the machine was already running in SELF TEST PART-3, and one of the special service-functions was activated, this function will remain ON when PART-3 is terminated. If this is NOT desired, PART-3 must be terminated with the selected function set to OFF.

The test principle of PART-1:

The self test program is looping constantly, while it reads the state of the control keys. When any key is activated, it converts the actual key type into a specific display pattern. During this process, the keyboard will NOT send data on the SERIAL TRANSMISSION SYSTEM.

PART-1 is testing the following "HARDWARE":

All keyboard CONTROL KEYS.
All keyboard DISPLAYS and LED indicators.

The RUNNING PROCEDURE for PART-1:

At start up time, the display must indicate: " -.--.--. " . This pattern is the initial pattern, and it indicates that NO keys are activated.

When activating the control keys, ONE at a time, and for a duration of minimum 1 SECOND, the following displays and indications shall appear:

(The first group of patterns will be ON as long as the key is activated).

Key :	<<	: Display pattern :=	1.11.11	
Key :	EDIT	: Display pattern :=	.22.22	
Key :	>>	: Display pattern :=	-.33.33.	
Key :	REC	: Display pattern :=	.44.44.	REC. LED := ON.
Key :	STOP	: Display pattern :=	.55.55.	STOP. LED := ON.
Key :	PLAY	: Display pattern :=	-1.66.66	

(The second group of patterns will be on for 1 sec. after the key activation. The key must be released before a new activation can be detected).

Key :	GOTO	: Display pattern :=	.77.77	LAST. LED := ON. (Wait for approx. 0.5 sec, then activate the "GOTO" key again)
Key :	GOTO	: Display pattern :=	.88.88	ZERO. LED := ON.
Key :	PAUSE	: Display pattern :=	1.99.99.	PAUSE. LED := ON.
Key :	TIMER ON/OFF	: Display pattern :=	.LL.LL.	
Key :	TIMER RESET	: Display pattern :=	.00.00	

Debugging during SELF TEST PART-1:

The debugging of the KEYBOARD CONTROL SYSTEM in relation to SELF TEST PART-1 is likely to fall within the following categories:

1: The microcontroller is NOT running at all.
The initial pattern may be wrong, and NO response to key activation.

2: If NONE of the control keys are operating: Check that the "LOCAL" selector is in position "ON". If so, check that there is 0.V (= GND) at the common terminals of the control keys.

3: The display hardware contains a fault which results in a faulty display pattern. The key activations are "operating", but one or more patterns are wrong or somewhat different from the listed patterns. This type of fault may also result in an incorrect initial pattern.

4: One or more of the keys are not operating, but some do result in a correct pattern.

5: A short circuit is present between two or more control keys. This situation may prevent a group of keys from operating correct, but the result of the test depends on the following:

If the shorted keys represents a double activation which is used during normal operation of the machine (such as "REC. + PLAY"), the result will be a missing response for the keys "REC" and "PLAY", plus some other keys in the same "group" (here: " << , EDIT , >> , STOP ").

The keys can be divided into the following three groups:

Group-1: " << , EDIT , >> , REC , STOP , PLAY ".
Group-2: " GOTO , PAUSE ".
Group-3: " TIMER ON/OFF , TIMER RESET ".

If the shorted keys represents a combination which is NOT used during normal operation of the machine, the SELF TEST program will detect this and a special diagnostic display is generated. The diagnostic display consist of an alternating display between the patterns for the involved keys and the pattern: "HELP".

An example: If the keys " << " and " >> " are shorted together, the display will alternate between:

" 1.11.11 "," HELP "," -.33.33. "," HELP "," 1.11.11 ",etc.

If the keys at the same time are kept permanently activated, the diagnostic display will appear immediately after the start of the SELF TEST PART-1.

The diagnostic display will only operate for keys in "Group-1".

In both the above cases, try to isolate the fault by following the connection between the individual keys and the input circuit to the microcontroller.

8.1.5 To SELECT and EXECUTE SELF TEST PART-2:

To select SELF TEST PART-2, set the selectors underneath the flap to:

"DISPLAY"....." SPEED "

"REMOTE KEYBOARD"....." ON "

THEN: PERFORM THE "SELF TEST START PROCEDURE".

OR: In case that the keyboard was already running SELF TEST PART-1 or PART-3, then just position the selectors as described for running PART-2. (In this situation the START PROCEDURE is NOT needed).

NOTE ! If the machine was already running in SELF TEST PART-3, and one of the special service functions was activated, this function will remain ON when PART-3 is terminated. If this is NOT desired, PART-3 must be terminated with the selected function set to OFF.

The test principle of PART-2:

This test performs a complete test of the SERIAL TRANSMISSION SYSTEM between the keyboard and the logic board.

PART-2, the RUNNING PROCEDURE :

At start up time, the display must indicate: " --.-- " . This pattern is the initial pattern, and it indicates that NO keys are activated.

When activating the control keys, ONE at a time, the following displays must appear:

```
Key:   <<    : Display pattern :=    11.11
Key:   EDIT  : Display pattern :=    22.22
Key:   >>    : Display pattern :=    33.33
Key:   REC   : Display pattern :=    44.44
Key:   STOP  : Display pattern :=    55.55
Key:   PLAY  : Display pattern :=    66.66
Key :  Any NOT-allowed double-key activation:
             : Display pattern :=   "  .  "
```

(A "NOT allowed" key activation is a key combination which is NOT used during normal operation of the machine).

8.1.6 To SELECT and EXECUTE SELF TEST PART-3:

NOTE ! If PART-1 and PART-2 cannot run correctly at the machine, it has no meaning trying to run PART-3 !

To select SELF TEST PART-3, set the selectors underneath the flap to:

"DISPLAY"....." SPEED "
"REMOTE KEYBOARD"....." OFF "

THEN: PERFORM THE "SELF TEST START PROCEDURE".

OR: In case that the keyboard was already running SELF TEST PART-1 or PART-2, then just position the selectors as described for running PART-3. (In this situation the START PROCEDURE is NOT needed).

The test principle of PART-3:

This part of the self test system is primary concerning the logic board, therefore in relation to PART-1 and -2, no additional functions are tested in the KEYBOARD.

PART-3 makes it possible to establish individual control of the WIND MOTORS, the CAPSTAN MOTOR, the PINCHROLLER/TAPE LIFT SYSTEM, and the RECORD and ERASE control signals, all WITHOUT having tape loaded at the machine.

PART-3 is using the same control keys and display codes as for PART-2.

PART-3 is testing the "basic operation" of the WIND MOTORS, the CAPSTAN MOTOR, the control signals for RECORD and ERASE, and the PINCHROLLER/TAPELIFT SYSTEM.

PART-3, the RUNNING PROCEDURE :

At start up time, the display must indicate: " --.-- " . This pattern is the initial pattern, and it indicates that NO keys are activated.

When activating the normal control keys, the associated display pattern will appear on the display. It is now possible to switch between a set of "PHASE's" of machine functions.

The activation of either "TIMER ON/OFF" or the "TIMER RESET" keys, will cause a change between the current "PHASE" and the next "PHASE" of the actual possibilities. (If the current "PHASE" is the last "PHASE" in a set, the next will be the first "PHASE").

Anytime a new control key is activated, the previous function will be set to "OFF" at the FIRST FOLLOWING activation of either "TIMER ON/OFF" or "TIMER RESET".

Key: << : Display pattern := 11.11

Provides control of the following machine functions:

PHASE.1 : Sets the SUPPLY MOTOR to ON.
PHASE.2 : Sets the SUPPLY MOTOR to OFF.

Key: EDIT : Display pattern := 22.22

Provides control of the following machine functions:

PHASE.1 : Sets the machine into VARIWIND.
PHASE.2 : Sets VARIWIND to OFF.

Key: >> : Display pattern := 33.33

Provides control of the following machine functions:

PHASE.1 : Sets the TAKE UP MOTOR to ON.
PHASE.2 : Sets the TAKE UP MOTOR to OFF.

Key: REC : Display pattern := 44.44

Provides control of the following machine functions:

PHASE.1 : Sets RECORD to ON.
PHASE.2 : Sets ERASE to ON. (and RECORD: OFF)
PHASE.3 : Sets both RECORD and ERASE to ON.
PHASE.4 : Sets RECORD AND ERASE to OFF.

Key: STOP : Display pattern := 55.55

Provides control of the following machine functions:

PHASE.1 : Sets the PINCHROLLER/TAPELIFT SYSTEM into position: "PAUSE".
PHASE.2 : Sets the PINCHROLLER/TAPE LIFT SYSTEM into position: "PLAY".
PHASE.3 : Sets the PINCHROLLER/TAPE LIFT SYSTEM into position: "WIND" (Lift out).
PHASE.4 : Sets the PINCHROLLER/TAPE LIFT SYSTEM into position: "STOP"

Key: PLAY : Display pattern := 66.66

Provides control of the following machine functions:

PHASE.1 : Sets the CAPSTAN MOTOR to ON.
The motor will run in relation to the tape speed selector.
PHASE.2 : Sets the CAPSTAN MOTOR to OFF.

Key: Any NOT allowed double key activation:

: Display pattern := " . "

NOTE : This will cause the logic board to CANCEL the latest valid function selection ! It is then necessary to RESELECT whatever function is desired.

NOTE; Further and more detailed information is available in the document "THE FRIDA LOGIC CONTROL SYSTEM". This document also describes debugging and fault finding in the logic circuits.

8.2 AUDIO LOGIC / DRIVER BOARD

DRAWING 2384
PART 451520

The circuit board contains two independent circuits;

- The audio logic.
- The driver circuit for the pinchroller and tape lift solenoid.

8.2.1 AUDIO LOGIC

DRAWING 2384-1/4

The audio logic is the interface between the microprocessor and the audio electronics. The circuit also handles some inputs from the pushbuttons that are related to audio commands.

Several AND and NOR gates are used to decode the input signals and give the proper commands to the audio amplifier.

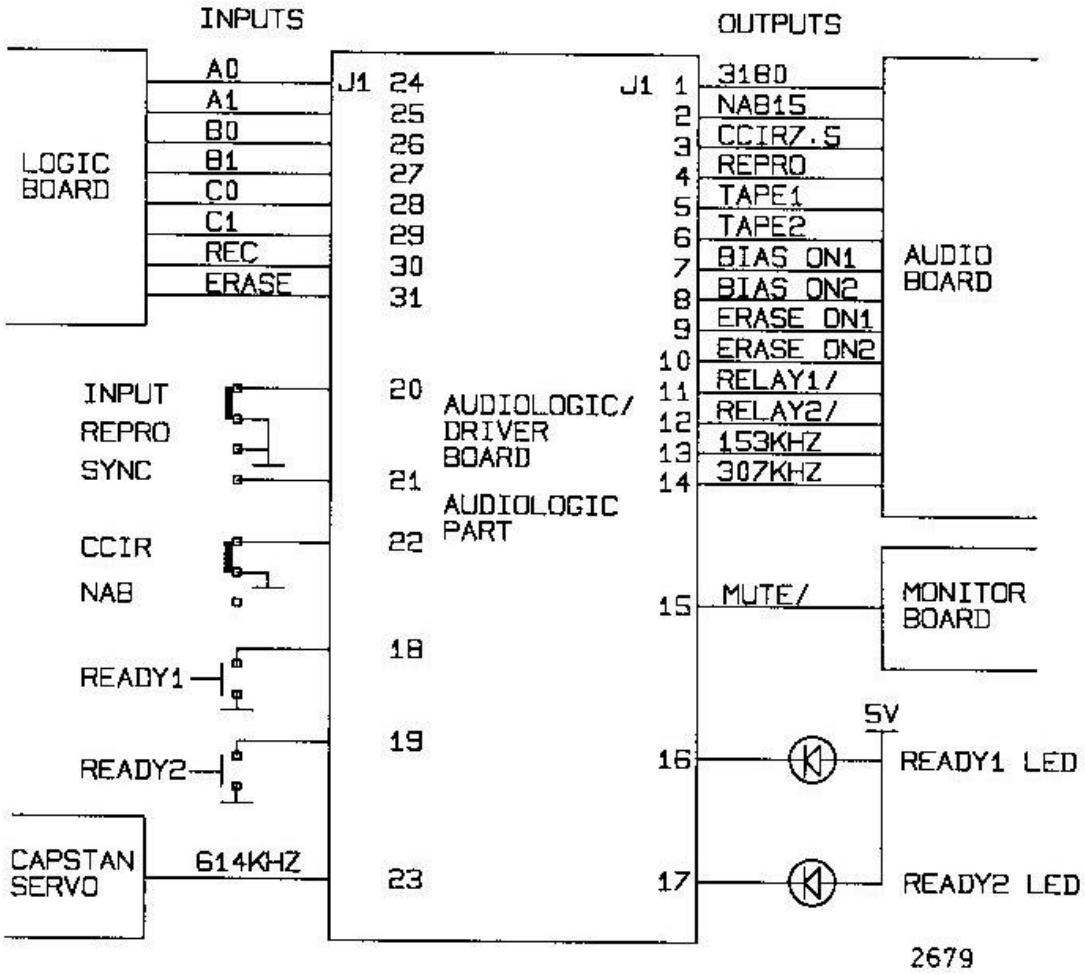

IC8 contains two oneshots. When BIAS ON1 goes from low to high the signal /OA (IC8 pin 7) goes low for approx. 100 mS. This makes the /RELAY 1 go high 100 mS after the BIAS ON1 has gone low.

The same is valid for /RELAY 2 in relation to BIAS ON2.

IC10 is a double oneshot which acts as a debouncer for the two pushbutton inputs /READY 1 and /READY 2. The two oneshot outputs OA (pin 6) and OB (pin 10) is routed to a double flip flop (IC11) whose output O1A (pin 1) changes level every time the /READY 1 button is activated.

The same is valid for the other output O1B (pin 13) in relation to the /READY 2 pushbutton.

At power on O1A and O1B are low.

The first time the /READY 1 is activated, O1A goes high, at second activation O1A goes low and so on. Corresponding also for O1B and /READY 2.

IC13 is a double down counter. A 614 kHz square wave signal is routed to the input, pin 2. This signal is divided with 2 and 4 so that a 307 kHz signal appears at pin 3 and a 153 kHz signal at pin 11. These two signals are shaped to sinewaves in the following LC circuit.

From IC13 (pin 14) a 30.7 kHz square wave signal is taken and divided further in IC2 and a 1.87 Hz comes out at pin 3. This is the flash frequency for the two READY LED's on the frontpanel.

The 30.7 kHz is also used as clock signal for the debouncer IC10.

IC9 is a double NAND gate with open drain outputs that drives the ready 1 and 2 LED's.

IC15 is a double oneshot. When C1 goes from low to high simultaneously with C0 is high, makes OA (pin6) go high for approx. 0.5 s.

If C0 goes from high to low simultaneously with C1 being high, OA (pin 10) will be high for approx. 0.5 s. This affects the /MUTE.

Note: Signal names with the prefix "/" indicates inverted signals (active low"). In diagrams these signals are overlined.

8.2.2 DRIVER DRAWING 2384-2/4

The two first op amps in IC1 is the ramp generator. The "start voltage" of the ramp is always 0 V. The voltage at the top of the ramp is set by C0 and C1 together with the setting of potentiometer P2.

The third op amp in IC1 is a differential amplifier. The amplifier compares the output from the position sensor amplifier and the rampgenerator output.

The output makes the solenoid move to a position where the voltages at TP1 and TP2 are equal.

The fourth amplifier in IC1 together with T3 forms the current driver for the tape lift and pinchroller solenoid.

The position sensor is an "optical switch" with a light emitting diode and a photo transistor. T2 together with R20, R22 and R73 forms a constant current generator that supplies the LED.

P1, D8 and R21 sets a suitable working point for the photo transistor. P1 makes it possible to compensate for tolerances in the sensor and solenoid components.

Routine adjustment of P1 and P2 is described in section 7.3.5

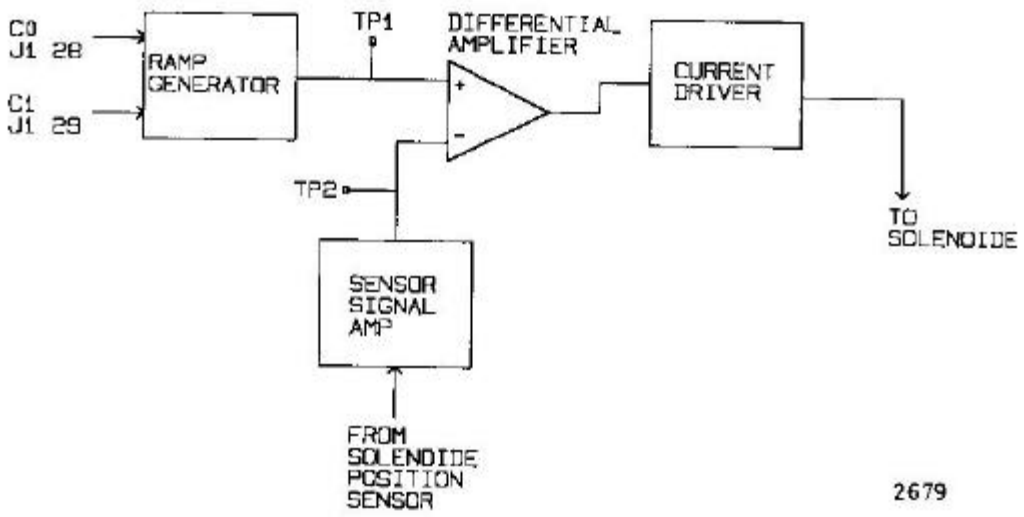

Note: Signal names with the prefix "/" indicates inverted signals (active low"). In diagrams these signals are overlined.

8.3 CAPSTAN MOTOR SYSTEM

The capstan motor system can be divided in 3 basic parts;

A: The mechanical drive system with motor, belt drive and capstan shaft.

B: The speed sensor part with tacho disk and opto sensor mounted on the capstan shaft. The output signal from the sensor is a sine voltage with a frequency proportional to the speed of the tacho disk and thus also the capstan shaft.

C: The capstan servo electronics which monitors the sensor signal, compares it with a crystal generated reference frequency and corrects the motor speed if there is any discrepancy.

The servo system is of PLL type (phase locked loop) which ensures an speed accuracy limited only by the tolerance of the crystal generated reference frequency.

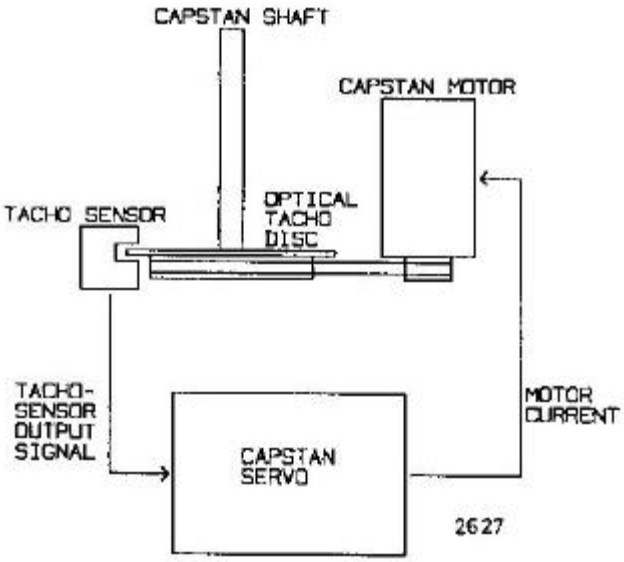

CAPSTAN DRIVE UNIT
FRIDA

8.3.1 CAPSTAN SERVO SYSTEM

DRAWING 2389
PART 451512

The speed reference is a crystal controlled frequency generator, X1 and IC1. The output is a 9600 Hz square wave signal at pin 15.

This signal, INT.REF, is used in normal operation. There is also a possibility to control the speed by an external signal, EXT.REF, or VARISPEED (DC control).

With an EXT.REF signal the speed can be controlled with an external frequency of 6400 - 14400 Hz corresponding to a speed range of +50 to -33 % of selected nominal speed.

The same speed range can be obtained via the VARISPEED input using a DC voltage.

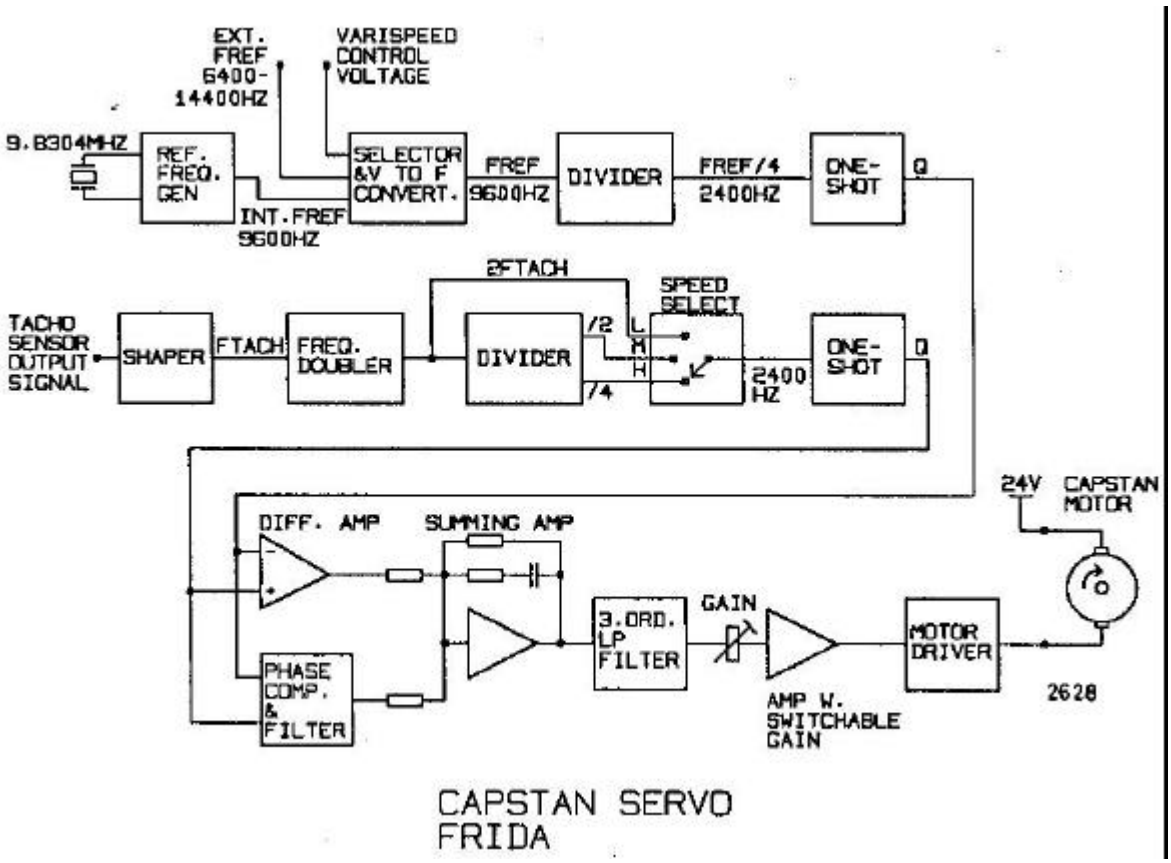

CAPSTAN SERVO
FRIDA

Selection of the three control possibilities is done in IC2.

IC3 contains a phase comparator and a VCO (voltage controlled oscillator). When INT.REF or EXT.REF is selected, IC3 acts as a clock regenerator which removes eventual jitter on the input signal. Otherwise input signal (pin 14) and output signal (pin 4) is identical.

When VARISPEED is selected the VCO is used as a voltage to frequency converter.

The output signal from IC3, FREF, with a nominal frequency of 9600 Hz is routed to a 1/4 divider, IC4 pin 2. The output, FREF/4, nominally 2400 Hz is routed to the oneshot IC5 pin 5.

The output signal, Q, is taken from pin 6. The pulse width is set by R27 and C11.

The tacho sensor signal is run through a shaper (IC7) giving the square wave signal FTACH which is buffered in IC8. FTACH can be monitored at testpoint TP2.

The next part of IC8 together with R23 and C10 makes a frequency doubler, the output signal is named 2FTACH and has the shape of a train of "spikes". The 2FTACH is routed to the divider IC4 pin 10. With the first half of IC6 it is possible to select between the direct signal 2FTACH, 2FTACH/2 and 2FTACH/4.

When 2FTACH is selected the tapedeck will run at the lowest speed, 3.75 ips. When selecting 2FTACH/2 the capstan motor is forced to rotate twice as fast to obtain the same frequency at the output of the selector (IC6 pin 13), i.e. the speed is increased to 7.5 ips. In the same manner the speed 15 ips will be achieved by selecting 2FTACH/4.

The signal from IC6 pin 13 is routed to a frequency demodulator in the form of a oneshot, the second half of IC5.

The DC content at the output (IC5 pin 10) is proportional to the input frequency. The output signals from the two oneshots goes to a differential amplifier (1/4 IC11, SIL1). A frequency difference between the two oneshot signals will result in an error voltage on the output (IC11 pin 7). This error voltage is amplified in the next stage, a summing amplifier around 1/4 IC11.

The signal is next filtered in a 3rd order low pass filter (1/4 IC11). The filtered signal (IC11 pin 8) is routed via the gain control P2 to IC11 pin 13. Together with IC6 it makes an amplifier stage where the gain is changed as a function of of tape speed.

After this follows the motor driver stage (1/2 IC10). T2 and T1 is used to stop the capstan motor by pulling the base of T2 low so that T2 goes off. T3, T4, T5 and T6 is the circuit that short circuits the capstan motor at STOP to ensure that the motor stops quickly.

The principle of the servo system is that, if the frequency of the two oneshot output signals significantly differs from each other, an error voltage is generated that will force the motor to correct the capstan speed. As the frequencies approaches each other, the error voltage will be too small to completely reduce the speed error.

To achieve a zero speed error a phase comparator, IC9, is added together with a filter (1/2 IC10 and SIL2). The phase comparator compares the phases of the two oneshot signals and supplies an output at pin 13 containing pulses with a width that is proportional to the phase difference. These pulses are filtered and the output (IC10 pin 7) is routed to the summing amplifier together with the output signal from the differential amplifier. In this way the phase comparator controls the absolute speed of the capstan shaft, while the oneshots control and minimises high frequency speed deviations.

INDICATORS:

Capstan lock LED: Indicates that capstan speed is "locked" to the crystal generated frequency, i.e. tape speed is correct.

TEST POINTS, PLAY MODE:

TP 1: Output from phase comparator.
DC voltage 7.5 V with positive or negative pulses at either 15 or 0 volt.

TP 2: FTACH, square wave signal;

Tape speed -->	FTACH
3.75 ips	1200 Hz
7.50 ips	2400 Hz
15.00 ips	4800 Hz

TP 3: Tacho oneshot output.
15 volt pulses with a pulse width of approx. 200 micro-seconds.

TP 4: Output signal from the variable gain amplifier.
1.5 - 2 volt DC voltage with a slight 2400 Hz ripple.

TP 5: Motor current.
0.4 - 0.5 volt DC voltage with a slight 2400 Hz ripple.

TP 6: Ground.

ADJUSTMENTS

The circuit has two adjustments.

P1 sets the pulse width of the tacho oneshot.
P2 sets the servo loop gain.

Both are factory adjusted and do under normal conditions not require any routine adjustments.

P1: Connect oscilloscope with 10x probe to TP 1. With the machine in play mode at 7.5 ips adjust P1 to the following pattern;

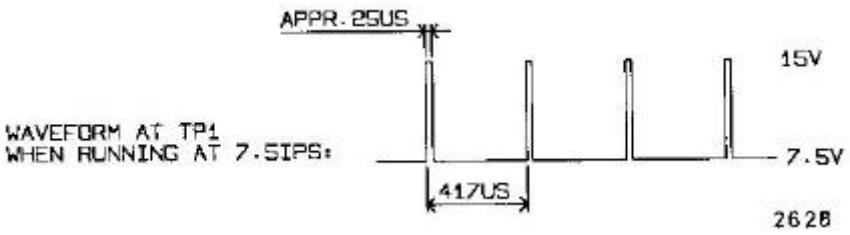

If oscilloscope is not available, set P1 to the centre of the adjustment area where the capstan lock LED is lit.

P2: Load a 15 ips w&f test tape and connect a w&f meter. Set meter to unweighted (linear) mode. Turn P2 fully clock wise. While monitoring w&f, slowly turn P2 counter clock wise until the w&f value starts to increase. Correct setting is the point just before the w&f value starts to increase.

If w&f meter is not available P2 can in an emergency be set to 3 o'clock position.

After adjusting P2 it is necessary to go back and readjust P1.

Note: Signal names with the prefix "/" indicates inverted signals (active low"). In diagrams these signals are overlined.

8.4 TAPE SERVO CONTROL

DRAWING 2388
2486
PCB 94013X
PART 451511

The circuit contains;

- Two channels, supply and take up, with frequency ratio controlled gain.
- Servo controlled wind functions, FW fast forward, REW rewind and VARI WIND.
- Slow take up.
- 47 kHz triangle generator.

The two channels, Supply and Take Up, are identical from sensor input (J1-21 for supply and J2-4 for take up) to the outputs Supply Drive Out (J1-13) and Take Up Drive Out (J1-12).

The signal route for Take Up is:
The signal from the take up sensor arm enters at J2-4 into a potentiometer that sets the sensor arm position. Signal is then routed through IC2A, IC7A and IC6A to the D/A converter IC16 followed by the current to voltage converter IC6D to the output J1-12.

The Supply channel is built correspondingly.

The circuit IC11 to IC16 compares the frequencies and sets IC16 to give a gain ratio. The Take Up motor rotation sensor signal enters at J1-4 is routed to the buffer IC9B followed by a 1/8 divider (IC11). The divided frequency is routed to a Johnson counter (IC12) as a reset signal. It will then count the tacho pulses coming from the Timer Tacho Roller which enters at J1-8. The tacho pulses are buffered in IC9C before entering IC12-14.

After counting two pulses pin 2 (Q1) will go high and give a latching signal to IC14 pin 9, hex D flip-flop. At the next pulse pin 4 (Q2) will go high and IC13 will be reset. It can now count the tacho pulses from J1-8 until the next latch pulse followed by reset arrives. The 6 bits from the latch is then routed to the D/A converter IC16.

IC15 is a R/S flip-flop which is set to high at power on and at tape off. This ensures that IC16 pin 5 is set while the 5 other bits are low. The flip-flop will be reset at first latch pulse.

The circuit for Supply is identical.

IC4 ensures that both Supply and Take Up channels are shorted in STOP, PAUSE, FW, REW and VARI WIND but separate in PLAY mode. IC4 is controlled by the signals C0 and C1 which through a delay line enters IC4 at pin 10.

IC3A is a voltage reference which in "Roller Blind" mode sets a fixed tape tension. The voltage is injected in the supply channel.

The circuit IC8, 3 and 7 controls the wind functions FW, REW and VARI WIND. In STOP mode the signals A0 and A1 are 0,0 (IC8 pins 9,10) which connects pin 13 to pin 12 letting through the 7.50 volt. This results in both IC7 pin 8 and IC7 pin 14 being 0 volt. These two outputs are routed through R37 and 38 to the Take Up and Supply channels. As there is 0 volt at the non inverting inputs no offset is created in STOP mode.

In FW mode is IC8 pins 13 and 14 connected giving approx. 13.6 volt at pin 13. IC7 pin 8 will now be negative and IC7 pin 14 positive. This will offset the two channels so that the outputs J1-12 (Take Up) will be more positive. At the same time J1-13 (Supply) is more negative. The tape will therefore move forward.

In REW mode is IC8 pins 13 and 15 connected giving approx. 1.4 volt at pin 13. IC7 pin 8 will now be positive and IC7 pin 14 negative. This will offset the two channels so that the outputs J1-12 (Take Up) will be more negative. At the same time J1-13 (Supply) is more positive. The tape will therefore move in rewind direction.

If VARI WIND is selected, the output of IC8 pin 13 will vary between 1.4 and 13.6 volt. From this follows that IC7, pins 8 and 14 will also vary. This creates the variable wind speed mode.

The constant wind speed is controlled by a one shot circuit, IC5A, which is triggered by the the tacho pulses TC0 coming from the Timer Tacho Roller. The output Q at pin 6 then filtered in IC3B resulting in a DC voltage corresponding to the wind speed. The DC voltage is routed through IC3C with 0.5 times gain and can be set to add or subtract in relation to the 7.50 reference voltage at IC4C and transistor T1. IC4C is controlled by the tape direction signal TDIR entering at J1-24. The resulting voltage at IC3 pin 8 is routed to the second half of IC8 and further as feedback to IC3D.

Higher winding speed requires higher tape tension. The speed related DC voltage is routed from IC3 pin 7 via potentiometer P3 to the reference circuit for supply and take up channels. This results in an variable and increasing DC value at J1-12 and J1-13 giving speed controlled tape tension.

The input "ACC POWER CONTROL" AT J1-14 is a current from the two reel motor amplifiers which is equal to the the power they produce together. If acceleration or de-acceleration result in a larger power than is allowed, the output IC2 pin 8 will go from 13.6 volt towards 7.5 volt and IC2 pin 14 will go from 1.4 volt towards 7.5 volt. This limits the maximum acceleration/de-acceleration.

The function slow take up which slowly absorb the tape slack until tape tension is established is controlled in the second half of IC5, a one shot circuit. The signal "Slow Take Up" at J1-6 enables the circuit which is then triggered by J1-5 which is the sensor on the supply motor. The output Q at IC5 pin 10 is then filtered in R28/C6/R27/C5 and routed to the positive input at IC6 pin 5 in the supply channel. This makes the Supply Drive Out, J1-13 to go more positive and the supply motor will absorb the tape with a constant low speed.

IC23 is a triangle generator supplying approx. 47 kHz. The DC offset is set by R75/R76 and the frequency is set by R79/C20. This is the switch frequency is used by the two reel motor amplifiers.

Two reference voltages of 5.00 and 7.50 volt are used throughout the servo control. The voltages are generated in IC1 together with 1% resistors.

TEST POINTS:

TP 1: Supply servo arm voltage:
PLAY Approx. 7.5 V
WIND Approx. 6-8 V at max. speed 480 ips.
REWIND Approx. 9-11 V at max. speed 480 ips.

TP 2: Take up servo arm voltage:
PLAY Approx. 7.5 V
WIND Approx. 9-12 V at max. speed 480 ips.
REWIND Approx. 8-10 V at max. speed 480 ips.

TP 3: Wind speed corresponding DC voltage:
1 V approx. 40 ips.
12 V approx. 480 ips.

TP 4: Wind speed servo error output:
7.5 V at STOP, PLAY
Positive at REWIND -> 7.5 at correct speed.
Negative at WIND -> 7.5 at correct speed.

TP 5: Take up drive output:
PLAY approx. 1- 3 V depending on active reel size
WIND approx. 9-14 V depending on active reel size
REWIND approx. + 1 V AC at max. speed.

TP 6: Supply drive output:
PLAY approx. 0.5-2 V depending on active reel size
REWIND approx. 8-14 V depending on active reel size
WIND approx. + 1 V AC at max. speed.

TP 7: 47 kHz triangle output:
Approx. 46-51 kHz
Approx. 13 Vpp
Approx. -3 V offset

TP 8: Ground.

Routine adjustment of P1, P2 and P3 is described in section 7.3.4

Note: Signal names with the prefix "/" indicates inverted signals (active low"). In diagrams these signals are overlined.

8.5 INPUT/OUTPUT BOARD

DRAWING 2383
PCB 94017X
PART 452505

The circuit board contains the electronically balanced audio input circuit and the electronically balanced and floating audio output circuit.

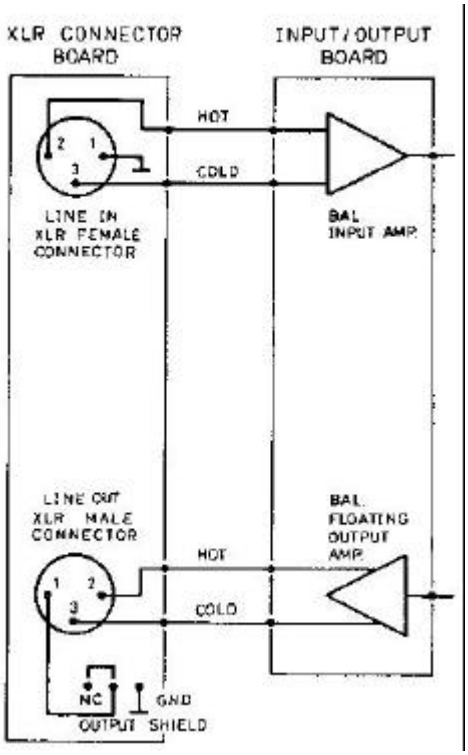

BALANCED INPUT CIRCUIT

IC2 with R6-12 makes out a traditional differential amplifier.

To eliminate that unsymmetry in the source impedance affects the CMRR (common mode rejection ratio), a buffer (IC1A, IC1B) insulates the differential amplifier from the source.

Resistors R6-12 are all 0.1 % to secure a CMRR value better than 60 dB. The circuit has a damping of 6 dB.

IC3 and IC4 with related components make out the second channel in the same manner.

BALANCED AND FLOATING OUTPUT CIRCUIT

The circuit has the function corresponding to a transformer. The output can "float" in relation to ground without the voltage difference between hot and cold is affected. Smaller differences in ground potentials (ground loops) between the recorder and connected units have little influence.

It is possible to connect external equipment unbalanced by shorting "cold" to ground without affecting the output level.

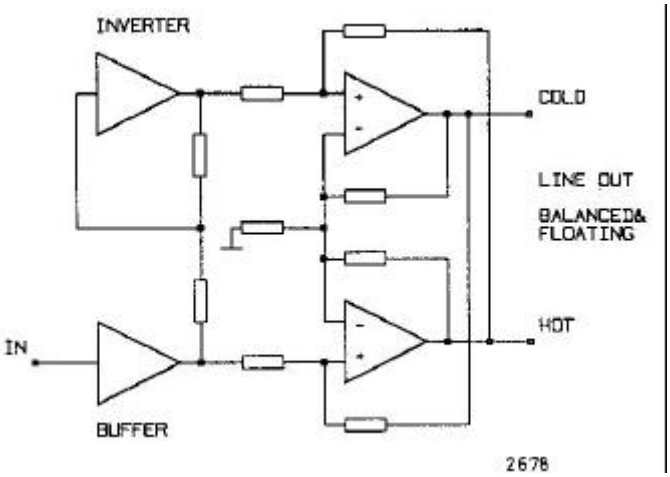

IC5A acts as an input buffer while IC5B is an inverter (phase shift). IC6A together with T1 and T2 makes the "negative" half of the output stage, i.e. the part that supplies the "cold" output.

IC6B with T3 and T4 is the "positive" half and supplies the "hot" output.

The transistors T1 to T4 are added so that the circuit is able to drive low impedance loads down to 300 ohms or less.

The diodes D9-10, D16-17 limits the output current to approx. 60 mA peak and acts as a short circuit protection.

Resistors R37 and R49 are cross feeding and makes the circuit floating.

IC7 and IC8 with related components make out the second channel.

ADJUSTMENTS

Output symmetry is adjusted with P1 so that the "cold" output is equal to the "hot" output (but with inverse polarity) when both outputs are loaded in relation to ground. The adjustment is factory made and readjustment should not be necessary under normal circumstances. If control or readjustment is required, use the following procedure:

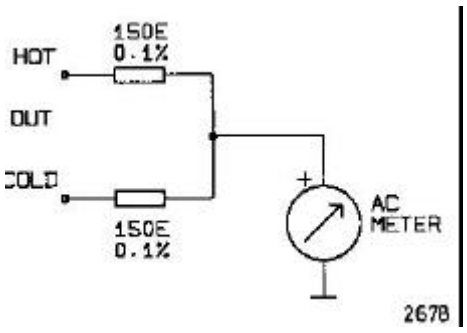

The absolute value of the load resistors is not critical but they MUST be equal.

Set recorder in INPUT mode and feed in 1 kHz, 1.55 V. Adjust P1 for minimum reading on the AC voltmeter.

Repeat procedure for channel 2 and adjust P2.

Note: Signal names with the prefix "/" indicates inverted signals (active low"). In diagrams these signals are overlined.

8.6 MOTOR POWER AMP

Drawing 2391
PCB 94014X
PART 451515

The circuit contains;

- Switched push-pull motor driver for one motor.
- Brake solenoid driver.
- Rotation sensor circuit.

The motor driver accepts input signal up to + 10 V and converts it into a power output signal to the motor.

The signal route from input is:
The input drive signal enters at J1-6 into IC1-b where it is rectified, into IC1-d where it is compared with the feedback signal from the output driver. Signal is then routed to IC2-c where it is compared with the switch frequency (approx. 47 kHz triangle wave) which enters at J1-7. The resulting output, which will now be a variable duty-cycle square wave is then routed to IC3-a,b Schmitt trigger input NAND gates, and to the driver stages for the SIPMOS transistors. For positive input the driver stage T2,5,6 is active and for negative input the driver stage T1,3,4 is active.

The driver stages are selected like this:

From the input J1-7 the signal is routed to IC1-a which will produce a logical '1' if positive and '0' if negative at the cathode of D2. This signal is led to IC3-b and if high, activates the driver. The signal is also inverted in IC3-c and routed to the other driver section and therefore only one of the two drivers is selected at the same time. The inverted signal is also routed to T10,11 which selects the other part of the H-bridge. If the signal is high, T10 is selected and if the signal is low T9 is selected.

When the upper driver section (T1,3,4) is active and produces a 'high' at the output, the output SIPMOS, T7, will conduct and charge the coil L1 and when 'low' the coil will discharge through the reverse diode of T8. The two capacitors C8,9 will filter out the switch frequency and produce DC voltage to the motor which is connected at J2-3,4.

When lower driver section the same as above will happen only, this time the reverse diode of T7 will now conduct.

The components C7, D4,5 will when either T7 or T8 is switching, produce a voltage of about 38 V at the cathode of D4 to make a higher drive voltage for the gates of T7 and T9.

The feedback from the output is produced by amplifying and filtering the voltage produced by an approx. 8 cm pcb wire. This is done in the circuit around IC1-c where the two potentiometers P1 and P2 are the calibration offset and gain. The output is then routed back to IC1-d to close the loop. The resistor R48 also connected to this output produces a current equal to the power produced in the circuit. This signal is fed to the Tape Servo Control board, where it is added to the signal from the other motor amplifier, to produce a power limit function.

The motor driver is disabled by setting the control signal 'Motor off' J1-4 high.

The input signal for for the solenoid driver, 'Brake Active', which is identical to the 'Motor Off' signal, enters at J1-5 and is routed to IC2-a. When the input is 'low' the output of both IC2-a,b is floating and the drive voltage to the output transistor ,T12, will be 24 V and the solenoid will be fully driven for about 1 sec. until C19 is charged through R44 up till a higher level at the negative input of IC2-b than the positive. When this is reached the output of IC2-b is pulled low and the drive voltage of T12 will then be about 10 V enough for the solenoid to hold.

When the input signal is high the output of IC2-a will go low releasing the solenoid, and at the same time discharging C19 through D6.

The rotation sensor circuit is built around IC2-d, and will when a certain current passes through the sensor, make a polarity change of the two inputs and produce a level change at the output. The signal is routed to J1-8.

Testpoints:

TP 1. Feedback signal at wind. Normally up to +8 V.
TP 2. Driver signal at active. Up to approx. 38 V peak.
At not active 0 V.
TP 3. Driver signal at active. Up to approx. 15 V peak.
At not active 0 V.
TP 4. GND (0 V).
TP 5. Rotation sensor output. 0 V to 15 V square wave.

Jumpers:

JM1: Motor on/off. This is mostly used in the self test mode to check the brake function.
JM2: Drive/Cal mode. This is used to calibrate the motor amplifier.

Adjustment procedure:

ADJUSTMENT OF THE MOTOR POWER AMPLIFIER IS ONLY REQUIRED IF IC1 HAS BEEN REPLACED.

When the top plate has been removed there is access to the supply side amplifier testpoint and trimmers. To get access to the take up side amplifier, remove the bottom plate.

Adjustment of P1:

Turn on FRIDA, and leave in unload position. Place a voltmeter between TP1 (feedback signal) and TP4 (GND) and adjust to 0 V + 10 mV.

Adjustment of P2:

FRIDA off.
Remove the two wires for the motor and connect a 10 ohm 10 w resistor. Set jumper JM2 in cal. position, i.e. position towards J1. Enter Self Test Part-3 and select Motor Amp by pressing << for supply amp or >> for take up amp and activate by pressing Timer on/off or Timer reset. Adjust P2 for 10.0 V across 10 ohm resistor.

Adjustment of rotation sensor:

Connect an oscilloscope between TP5 (rotation sensor output) and TP4 (GND). Enter Self Test Part-3 and select motor as above, and by moving the sensor physically adjust the sensor so that the output is as close as possible to 50/50 duty cycle.

Hint: If oscilloscope is not available place a voltmeter in DC range and adjust sensor for 7 to 7.5 V at TP5.

Note: The motor should be running full speed at both adjustment procedures.

8.7 TAPE TIMER / LOGIC SENSOR

Drawing 2395
PCB 94015x
Part 451514

The circuit contains:

- 2 tacho sensors.
- Driver for Tape sensor in headblock.
- Supply servo arm and tape end circuit.

Tape movement and direction are sensed by the 2 slotted optical sensors, PS2 & PS3. When one of the 64 holes in the tacho disc passes, the current in the transistor part of the sensor increases, producing a voltage drop over the potentiometer and resistor in series. When the voltage falls beyond V.Ref, 7.5 V, the output of the comparator IC1-a(c) will go low and thus producing a continuously square wave when the tacho idler is turning.

To correctly detect tape movement and direction these signals should be approx. 50/50 duty cycle with a phase shift of approx. 90°.

The outputs are connected to J2-8 (TC0) and J2-10 (TC1).

The tape sensor located in headblock produces a 'CUE' signal and optionally a 'TAPE OFF', when a non-reflective tape passes, or when no tape is present in front of sensor.

The circuit consist of a 10/90 duty cycle 200 Hz square wave generator, IC2-a,b NAND gate Schmitt trigger type, and current driver T1, which drives the emitting part of the reflective sensor, OPB 703/704.

In the sensor part, a pulsing current will pass through R8 producing an AC voltage across. This signal will be able, via C6, to activate IC1-b pin 4 to go higher than pin 5, approx. 1.5 V, and thus pull down the output of IC2-b. The signal is filtered in R12, D2 and C7 to remove the 200 Hz. The signal is then inverted in IC2-d and routed to J2-5. Optionally the signal can, when jumper JM1 is removed, act as a 'TAPE OFF' signal through R13 and delayed by C8.

Supply servo arm signal and tape end function, is formed by PS1 which by 'looking through' an opto diaphragm produces a variable voltage between approx. 0 and 15 V. The signal is routed to J2-1 and connects to the Tape Servo Control board, where a 1k resistor and a 10k potentiometer to GND sets the arm position.

With servo arm in "rest position", i.e. 'tape end' position, no light passes through to the sensor, and pin 2 on the sensor goes to 0 V. The signal is compared in IC1-d with a reference voltage of 1.5 V, and if lower, the output, pin 14, goes low and IC2-d produces a 'Tape Off' signal which is routed to J2-6.

When top plate is removed, there is access to testpoints and trimmers.

Jumper JM1 is located on the solder side of the print. To get access, remove front bottom plate and panel and remove the audio amplifier.

Testpoints:

TP 0. TC 0 signal. 0 to 15 v 50/50 duty cycle.
TP 1. TC 1 signal. 0 to 15 V 50/50 duty cycle.

Jumper:

JM 1. Optional function. If removed 'CUE' signal also acts as 'Tape Off' signal.

Adjustment procedure:

Turn on FRIDA and enter Vari Wind at full speed (approx. 200 ips). Place probe at TP 0. Adjust P1 as close as possible to a 50/50 duty cycle. Procedure is repeated for TP 1 and P2.

The 90° phase shift is mechanically factory adjusted. Only when changing one of the 2 tacho sensors, PS2 and PS3, should phase shift be checked. If a small difference should occur, move one of the sensors closer to the other (or further apart), by unsoldering two pins, pressing sensors together, and solder again.

NOTE: IT IS OF VITAL IMPORTANCE THAT THE TIMER PULSES ARE CORRECTLY ADJUSTED. MISADJUSTMENT NOT ONLY AFFECT THE TIMER BUT ALSO THE TAPE DECK LOGIC AND CAN CAUSE THE RECORDER TO BEHAVE ERRATIC.

8.8 FRONT PANEL BOARD

Drawing 2393
(2386)
PCB 94023X
Part 451505
451506
451507

The frontpanel board is available in three different versions:

451505 Stereo and 2-track
451506 Broadcast
451507 Time code

The circuit contains:

- Panel processor.
- Display and driver.
- Keyboard.
- FADER START circuit.
- Selector switches and variwind potentiometer.

The panel processor performs several functions:

- Decoding of key commands.
- Calculation and generation of display reading in both Timer and Speed mode.
- Self test Part 1,2,3.

The processor is built around IC5, type 8749 processor with 2K bytes ROM internally, operating at a crystal frequency of 9.8304 MHz. The supply voltage is +5 V, at pin 40 and 26. C7, is the power on reset capacitor.

Key commands, except TIMER RESET and TIMER ON/OFF, is read through IC4, type 4519 quadruple 2-input multiplexer, to IC5 inputs. When IC5-35 is high 'x' inputs are read and at low 'y' inputs are read.

Switches REMOTE and DISPLAY together with the 2 remaining keys are read directly through buffers/schmitt-triggers to processor.

The LOCAL switch is used to disable key commands on front panel, but not the parallel inputs J1-7-13. These are routed to both REMOTE and SYNCHRO connector located at rear of FRIDA.

IC5 outputs DB0-5 are fed to IC6, a 4-digit non-multiplexing display driver, using 4 bits to control data inputs and 2 to control digit address. IC5-10 is connected as a write select to display driver. DB6 from IC5 is used both to select Self test function if shorted to GND at power on (JM2), and as a decimal point indicating 1/4 sec. at display. Resistors R50-51 controls brightness of the display.

The remaining outputs, P10-16 and DB7, are connected as display drivers, together with T1-3, for the 2-segment, and LED indicators for keyboard with IC2.

The serial communication to the main processor is generated at P17, serial data out (SD), P27, serial data in (SD) and INT, clock in (CK). The serial lines are routed to J1-19 (CK) and J1-20 (SD).

The FADER START circuit is built around IC1, a quadruple comparator. The signal path is; From input J1-14 signal is routed to IC1-a,b both connected as 2,5 V level triggers. For BREAK operation JM1 is connected to IC1-1 (a) and for MAKE operation connection is made to IC1-2 (b).

If PAUSE mode is entered, making IC2-14 go low and disabling T4, when fader is now activated, centre pin of JM1 is pulled low and thus charging C3 through R6, producing a low at IC1-13 (c) and consequently a PLAY command. Now IC2-14 will go high enabling T4 and disabling T5. When fader is down again the reverse action can take place, producing a low at IC1-14 (d) and thus a STOP command.

Speed selector switch, SW3, is connected as a pull high (+15 V) switch. These speed signals (B0,B1) are fed to J1-15,16, and are used throughout the machine.

For information on SW5 (track selector), SW6 (monitor sw), Ready push buttons (S12,13) and LED's (D7-9), see drawing 2386. These switches and LED's are only physically placed at panel board.

TESTPOINTS: TP 1: GND.
TP 2: +5 V.

JUMPERS: JM1: Fader start selector for MAKE or BREAK operation.
JM2: Self test jumper. When shorted at power on self test mode is entered.

9 SPARE PARTS

PART #	DESCRIPTION
	CAPSTAN MOTOR
	CONSOLE ON CASTORS
	CONSOLE ON CASTORS, BRIDGE WITH 2 SPEAKERS
	CONSOLE ON CASTORS, BRIDGE WITH METER & 2 SPEAKERS
	FLOORSTAND ON CASTORS
	FLOORSTAND WITH SHELF
	FLOORSTAND WITHOUT OVERBRIDGE
	PINCHROLLER W/ BEARINGS
	REEL MOTOR
	SERVO ARM, SUPPLY
	SERVO ARM, TAKE UP
	SPRING, BRAKEBAND
	SPRING, PINCHROLLER
	SPRING, TAPE LIFTER
450011	HEADBLOCK PLATE WITH 2/1 HEADS
450012	HEADBLOCK PLATE WITH 2/2 HEADS
450013	HEADBLOCK PLATE WITH 2/2 HEADS + TC
450014	HEADBLOCK PLATE WITH 2/2 HEADS, FULL TRACK ERASE
450021	CHASSIS
450022	TAKE UP ROLLER ASSY
450023	SUPPLY ROLLER ASSY W/O PCB
450026	TAPE CUTTER COMPLETE
450030	MASTERPLATE ASSY COMPLETE
450035	CAPSTAN MOTOR UNIT COMPLETE
450050	REELMOTOR ASSY TAKE UP
450055	REELMOTOR ASSY SUPPLY
450501	POWER SUPPLY
451001	OPERATING PANEL MECH BC
451002	OPERATING PANEL MECH 2/1 AND 2/2
451003	OPERATING PANEL MECH TC
451501	PCB (MOTHERBOARD)
451502	PCB MOTHERBOARD
451505	PCB FRONTPANEL BOARD 2/1 AND 2/2
451506	PCB FRONTPANEL BOARD BC
451507	PCB FRONTPANEL BOARD TC
451510	PCB POWER SUPPLY
451511	PCB TAPE SERVO CONTROL
451512	PCB CAPSTAN SERVO
451513	PCB LOGIC BOARD
451514	PCB TAPE TIMER LOGIC SENSOR
451515	PCB MOTOR POWER AMP
451520	PCB AUDIOLOGIC/DRIVER BOARD
451530	PCB TIME CODE BOARD
452501	PCB AUDIOAMPLIFIER 2-TRACK/TC
452502	PCB AUDIOAMPLIFIER STEREO
452505	PCB INPUT/OUTPUT BOARD ELECTRONIC BALANCED
452506	PCB INPUT/OUTPUT BOARD TRANSFORMER BALANCED
452512	PCB MONITOR BOARD 2/1, 2/2, TC
452513	PCB MONITOR BOARD BC
452515	PCB POTENTIOMETER BOARD 2/1, 2/2 AND TC
452516	PCB POTENTIOMETER BOARD BC
452520	PCB XLR BOARD
453501	SET OF PANELS
453510	HEADBLOCK COVER (W/ TAPE CUTTER)
453511	HEADBLOCK COVER (W/O TAPE CUTTER)
454001	PCB SWITCH BOARD (CONSOLE)

454002 PCB PANEL AMP RIGHT (CONSOLE)
454003 PCB PANEL AMP LEFT (CONSOLE)
454004 PCB VU PANEL BOARD (CONSOLE)
455501 CARRYING HANDLE
455511 19" RACK MOUNT KIT
455513 FOSTEX 4030 INTERFACE
455515 THEATRE DELAY
456001 SPARE PART KIT, FRIDA
501164 AEG ADAPTER WITH 295 mm PLATTER
501178 EXTENDER BOARD, TAPETENSION/CAPST/LOGIC
501179 EXTENDER BOARD, AUDIO
501180 EXTENDER BOARD, AUDIO LOGIC/DRIVER
501181 EXTENDER BOARD, IN/OUT+TIME CODE
501187 AEG ADAPTER WITH 270 mm PLATTER
501188 AEG ADAPTER WITH 282 mm PLATTER
815000 CINE CENTRE, UPPER PART
815010 CINE CENTRE, LOWER PART
816400 SCREW, CINECENTER TO HUB
822292 OPTO DIAPHRAGM, SUPPLY & TAKE UP
822450 PINCHROLLER WITHOUT BEARINGS
822900 TACHODISC, CAPSTAN 317
824630 BELT, CAPSTAN SYSTEM L=225
824710 TRANSFORMER, FERRITE T14 0001 BIAS
824720 TRANSFORMER, FERRITE T14 0002 ERASE
825240 TACHODISC, TAPE TIMER
825250 SPRING, SERVOARM
826100 SPLICING BLOCK
895921 BRAKEBAND
898871 SPRING, CINE CENTRE
898880 SCREW, CINE CENTRE
902258 RESISTOR 27E, 1.6 W
902301 RESISTOR ARRAY 4x10K
902302 RESISTOR ARRAY 4x100K
902361 RESISTOR NETWORK 8x680e
903126 POTENTIOMETER 220e
903132 POTENTIOMETER 10K SEALED
903133 POTENTIOMETER 22K
903134 POTENTIOMETER 47K SEALED
903135 POTENTIOMETER 100K SEALED
903136 POTENTIOMETER 22K SEALED
903138 POTENTIOMETER 470K SEALED
903151 POTENTIOMETER AUDIO 2x100K LIN
903152 POTENTIOMETER AUDIO 2x47K LOG
903180 POTENTIOMETER 10K LIN EDIT WIND
903213 POTENTIOMETER 10K MULTITURN
905224 CAPACITOR 220uF/40V
905225 CAPACITOR 4.700uF/40V
905232 CAPACITOR 4.700uF/25V
905311 CAPACITOR 10.OOOuF/40V
906111 CAPACITOR 180P TRIMMER
907115 COIL 1.5 mH
907120 COIL 4.7 mH
907150 COIL 40uH, 2A
911101 DIODE 1N4148
911202 RECTIFIER BRIDGE 26MB10A/PB10/FB2502 25A
911203 RECTIFIER B80-C3700/2200
911221 DIODE 1N4001
911309 DIODE ZENER 2V7
911312 DIODE ZENER 3V6
911324 DIODE ZENER 9V1 0.4W
911326 DIODE ZENER 10V
911391 DIODE ZENER 1N821
912101 TRANSISTOR BC237/BC547

912111 TRANSISTOR BC307/BC557
912141 TRANSISTOR BC327-25
912142 TRANSISTOR BC337-25
912143 TRANSISTOR BC556B
912144 TRANSISTOR BC640
912205 TRANSISTOR TIP 120
912241 TRANSISTOR BD139
912242 TRANSISTOR BD140
912442 TRANSISTOR BUZ 11
912514 TRANSISTOR FET 2SK117GR
912515 TRANSISTOR FET 2SK369
913102 IC OPAMP TL071
913107 IC OPAMP TL072
913110 IC OPAMP TL074
913114 IC OPAMP TDA 2002, POWER AMP
913122 IC OPAMP LM393
913126 IC OPAMP DUAL NJM/RC 4556
913127 IC OPAMP LF411CN
913133 IC OPAMP LM324N
913134 IC OPAMP LM339N
913135 IC OPAMP LM358
913136 TRANSISTOR ARRAY CA 3146E
913202 VOLTAGE REGULATOR uA 7805/L7805CV (5 V)TO220
913216 VOLTAGE REGULATOR L7815CV (+15) TO220
913217 VOLTAGE REGULATOR L7915CV (-15) TO220
913912 IC AD7523 D/A CONVERTER
913932 IC ICM7212 DISPLAY DRIVER
913933 IC UCN5810A SERIAL DRIVER
913934 IC UDN2595A BUFFER IC
913935 IC LM555CN TIMER
914401 IC CMOS CD4001
914406 IC CMOS CD4013
914408 IC CMOS CD4017
914411 IC CMOS CD4027
914416 IC CMOS CD4040
914419 IC CMOS CD4060
914420 IC CMOS CD4053
914421 IC CMOS CD4046
914423 IC CMOS CD4071B
914426 IC CMOS CD4093
914427 IC CMOS CD4081
914430 IC CMOS CD4052
914437 IC CMOS CD40106
914438 IC CMOS CD40107
914439 IC CMOS CD40174
914444 IC CMOS CD4070
914446 IC CMOS CD4503
914447 IC CMOS CD4519
914450 IC CMOS CD4518
914451 IC CMOS CD4520
914464 IC CMOS MC 14538 BCP
914754 IC TTL 74LS373
914802 IC 8749H MICROPROCESSOR, FRONT PANEL
914805 IC 8039 MICROPROCESSOR, LOGIC BOARD
914808 IC 8749HC MICROCOMPUTER IC OTP
914816 IC 2732 EPROM, LOGIC BOARD
915101 LED 3 mm, RED
915110 LED, FRONT PANEL 03
915140 LED, PPM METER, RED
915141 LED, PPM METER, GREEN
915142 LED, PPM METER, YELLOW
915236 DISPLAY HD 1105, 7-SEGMENT
915302 OPTO COUPLER H21A1

915305 OPTO INTERRUPTER OPB865T51/TLP800A, IR
915306 OPTO FORK OPB867T51
915321 OPTO REFLEX OPB 703/704, IR
922105 PUSHBUTTON SWITCH, TAPE DECK COMMANDS
922110 PUSHBUTTON, SAFE, TIMER, RESET
922120 SLIDE SWITCH, 3 POSITION
922121 SLIDE SWITCH, 2 POSITION
923225 TRANSFORMER, MAINS 18, 2x16, 8.6 V
924201 PLAYBACK HEAD, STEREO
924202 RECORD HEAD, STEREO
924203 ERASE HEAD, FULL TRACK
924206 RECORD HEAD, 2/2-TRACK
924207 PLAYBACK HEAD, 2/2-TRACK
924208 ERASE HEAD, 2/2-TRACK
925121 BEARING, BALL ULKZ 307X
925145 BEARING, BALL MF126ZZ
925182 SHIM PS 6x8x0.12
925183 SPRING WASHER FS 6x8
925185 SPRING WASHER FS 12x14
925217 BEARING SINTER 8x12x12
925250 BEARING, SINTER 3/6x10-9x1
927144 RELAY, RECORD
927148 RELAY, RECORD TC
955133 MAINS FILTER
955134 MAINS INLET WITH VOLTAGE SELECTOR
959345 CONNECTOR, MOTHERBOARD 45 PIN GO9
960104 SOLENOID, BRAKE
960105 SOLENOID, PINCHROLLER
960452 FLIGHT CASE, FIBREGLASS
960502 FAN 80 mm 12 V
960612 LOUDSPEAKER AD 2071/Z25
961906 FUSE 0.63 A S
961915 FUSE 1.25 A S
961941 FUSE 4 A S
962053 CRYSTAL 9.8304 MHZ
962211 NAB ADAPTER
969010 ALLEN KEY 1.5 MM
969012 ALLEN KEY 2.5 MM
969014 ALLEN KEY 4 MM
969016 ALLEN KEY 3 MM, LONG
969017 ALLEN KEY 2 MM, LONG
969020 SCREWDRIVER 40x2 mm
970129 WASHER 3/16
970131 WASHER 1/8
970132 WASHER 5/32
970142 WASHER 3/16
970146 WASHER 3/16
970205 WASHER, NYLON 2.8x6
970229 WASHER, NYLON 3.2x7x1
970604 SPRING WASHER 3.2x8x0.3
970703 NUT M3
970704 NUT M4
970705 NUT M5
970756 NUT, LOCK M3
974105 SCREW CHJ Z M3x5
974106 SCREW CHJ Z M3x6
974108 SCREW CHJ Z M3x8
974112 SCREW CHJ Z M3x12
974114 SCREW CHJ Z M3x14
974130 SCREW CHJ Z M3x30
974308 SCREW CHJ Z M4x8
974316 SCREW CHJ Z M4x16
974335 SCREW CHJ Z M4x35

974508 SCREW CHJ M2x20
974511 SCREW CHJ M1.6x16
974582 SCREW CHJ 5x65
974606 SCREW DIN 914 M3x4
974610 SCREW HEX DIN 912 M3x6
974611 SCREW HEX DIN 7984 M3x6
974612 SCREW HEX DIN 916 M3x5
974625 SCREW HEX DOME M3x8
974627 SCREW HEX DIN 912 M3x8
974639 SCREW HEX DIN 912 M3x12
974640 SCREW HEX DOME M3x10
974647 SCREW HEX DIN 7984 M3x16
974706 SCREW HEX DIN 916 M4x6
974815 SCREW HEX US DIN 7991 M5x12
974820 SCREW HEX DIN 912 M5x16
981711 TEST TAPE 15 IPS 1/4" DIN
981712 TEST TAPE 15 IPS 1/4" NAB
981719 TEST TAPE 7 1/2 IPS 1/4" DIN
981720 TEST TAPE 7 1/2 IPS 1/4" NAB
981723 TEST TAPE 3 3/4 IPS 1/4" DIN
981801 SPRING SCALE 100 g (TYPE 125H)
981802 SPRING SCALE 600 g (TYPE 150H)

10 APPLICATION NOTES

10.1 THEATRE DELAY (OPTIONAL ACCESSORY)

DRAWING 2578
PCB 94050X
PART 455515

The circuit connects to the remote connector and contains two functions;

- Delayed control of GOTO, STOP or PAUSE.
- LED indication of CUE signal.

From the input, J1-13, the cue signal is routed to LED 1. The Led will light up for high level.

Note: The cue signal is the signal generated by the optosensor mounted in the headblock. The cue signal appears at the remote connector pin 13. The optosensor is either the standard reflex sensor or the see-through sensor supplied with the theatre delay kit.

Sensor type:	Standard reflex sensor	Optional see-through
Cue tape	LED off	LED on
Magnetic tape	LED on	LED off

To trigger CUE, the tape shall for the see-through sensor be a transparent or semi transparent leader tape. The length of the leader tape is not critical but the circuit is designed for a typical length of 80 cm.

To trigger CUE, the tape shall for the reflex sensor be a non reflective surface tape like f.i. black coated tape facing the sensor. The length of the non reflective tape is not critical but the circuit is designed for a typical length of 80 cm.

After the LED the signal is via a filter routed to IC2A. With jumper JM4 selection is made for the type of opto sensor that is installed.

IC1A is a one shot that will be triggered if the signal PLAY indicate, J1-19 is high. The length of the pulse at IC1 pin 6 is proportional to the potentiometer settings (P1, P2) and selected tape speed.

The delay signal is then routed to IC1B which will only be active if J1-19 is high. The pulse at the output and T2 conduct and pull the selected (JM1) function.

The length of the pulse is set by C3/R15 or until J1-19 becomes low indicating Frida is no longer in play mode.

Selection of command is done with jumper JM1 that can be set to terminate a cue to GOTO, STOP or PAUSE which is default.

Speed selection indication enters at J1-23 which will be high at 15 ips and set IC2C high and select P2. At 7.5 ips IC2B will go high and select P1.

The delay can be disabled by shorting J3-1 and J3-2 with a jumper.

10.1.1 INSTALLATION OF THEATRE DELAY AND SEE-THROUGH SENSOR

Parts: 555555 Delay unit with
825840 interface cable
Holder for IR diode
Drawing 2604, 2578

- Remove the tape deck top plate.

- Remove the reflex type sensor and disconnect cable.

- Mount the new see-through sensor with 2 screws as shown in drawing 2604 and connect the cable to the Tape Timer/Logic Sensor board, connector J1.

- Set jumper JM4 for in position THEATER for the see through sensor.

- Connect the interface cable and the delay unit to the "REMOTE" connector at the back of the machine.

- Switch power on and adjust the position of the sensor so that the LED on the delay unit lights up for leader tape and goes off for normal magnetic tape.

- If mounting hole is not available (machines produced before Jan. 91) it is necessary to drill a 3.3 mm hole and countersink from below.

10.1.2 OPERATION

With the machine in PLAY mode and leader tape approaching, the optosensor will detect the beginning of the leader tape which will activate the preset delay and put the machine in PAUSE mode at end of the delay.

Pressing PAUSE (or using fader start) will start the machine, which will run until the next leader tape is detected and the procedure is repeated.

USER OPTIONS:

With potentiometers P1 and P2 the delay can be individually adjusted to suit the leader length being used.

The delay is normally terminated with a PAUSE command. Optional functions can be set with jumper JM1. Choose between PAUSE, GOTO and STOP. If set to position -- the leader tape will be ignored.

With the see through sensor the LED 1 will light up as long as the sensor detects leader tape.

Print terminals J3 #1-2 can be shorted by jumper or an external switch in order to disable the logic.

The described modification changes the fader start function where the recorder is "armed" with the PAUSE button.

After modification the fader switch will have the following function;

Fader down: The recorder is completely normal

Fader up: Frida goes into play mode from any mode.

If tape was unloaded, tape tension will be established (slow take up) followed by play.

Local panel goes OFF (disabled). Machine locked in play mode. Can only be stopped by pulling down fader or controlled by an installed parallel remote control.

If in wind mode, fader up will make Frida slow down and go into play mode.

If in search mode, a fader up will be ignored until search position has been reached when Frida will go into play mode.

Fader down: Frida goes to PAUSE mode and is again normal. Local panel again ON and working.

Frida can still be parked in PAUSE mode to achieve shortest possible start time.

NOTE 1: If fader is up when power is switched on, Frida will try to go into play mode.

NOTE 2: If a fader is not connected and jumper is in position "BREAK" this will be sensed as a fader up and Frida will go into play mode when power is switched on. A switch in series with the jumper or removing the jumper will prevent this.

The modification is done on the FRONT PANEL BOARD, pcb 940231 or 940232, diagram 2393.

- Remove transistors T4, T5 and resistor R52.
- Install diodes Da and Db in the holes made free from removing T4 and T5.
- Change value of capacitor C3 from 100 nF to 2µ2 (tantal).
- Cut the print ground track to switch SW4 on both solder and component side.
- Add ground connection on the component side.
- Cut the print track connection to the STOP button.
- Add connection to the PAUSE button.
- Mount Ra, Ta and Dc on the solder side of the print.

Fader start is as before connected between pins 1 and 12 at the remote connector. The jumper fader start make/break functions as before.

Parts needed:

1 912101 Transistor BC547	1 901410 Resistor 100 kohm
3 911101 Diode 1N4148	1 905109 Capacitor 2µ2 tantal

Eventually can a switch be installed in series with the centre pin of the fader jumper make/break to make it possible to disable the modification.

10.3 SYNCHRONISING FRIDA WITH ADAMS-SMITH ZETA-THREE

The interconnecting cable between recorder and synchroniser should be wired according to diagram 2665.

If the Frida recorder is not found on the menu the constants listed can be entered in the non-volatile memory. The Zeta-Three should have software 3.00 or later.

CONSTANT	VALUE	CONSTANT	VALUE	CONSTANT	VALUE
01	66H	34	29H	67	09H
02	13H	35	66H	68	00H
03	23H	36	OOH	69	88H
04	08H	37	20H	70	00H
05	72H	38	01H	71	00H
06	13H	39	05H	72	00H
07	01H	40	N/A	73	00H
08	01H	41	29H	74	00H
09	00H	42	N/A	75	00H
10	01H	43	N/A	76	N/A
11	00H	44	50H	77	00H
12	00H	45	00H	78	00H
13	00H	46	00H	79	00H
14	00H	47	00H	80	00H
15	00H	48	00H	81	N/A
16	00H	49	00H	82	00H
17	00H	50	01H	83	40H
18	00H	51	00H	84	00H
19	00H	52	00H	85	17H
20	00H	53	02H	86	00H
21	00H	54	04H	87	00H
22	00H	55	08H	88	00H
23	00H	56	00H	89	00H
24	00H	57	00H	90	00H
25	00H	58	00H	91	00H
26	00H	59	00H	92	01H
27	00H	60	00H	93	00H
28	00H	61	F4H	94	22H
29	N/A	62	00H	95	80H
30	N/A	63	00H	96	00H
31	N/A	64	00H	97	08H
32	N/A	65	00H	98	00H
33	00H	66	00H	99	08H

10.4 SYNCHRONISING FRIDA WITH AUDIO KINETICS ES1-11

The interconnecting cable between recorder and synchroniser should be wired according to diagram 3056.

10.5 SYNCHRONISING FRIDA WITH FOSTEX 4030

The Fostex 4030 synchroniser requires an active interface as described in diagram 2576.

The interface is available under part number 455513.

10.6 INCREASING LINE INPUT SENSITIVITY

SEE SEPARATE FILE 10_6

SUBJECT: CANCELLATION OF THE SAFE / READY BUTTONS ALLOWING RECORD TO BE ENTERED WITHOUT SELECTING READY.

VALID FOR: ALL FRIDA MODELS WITH SERIAL NUMBER UP TO 9251549.

PROCEDURE: Remove the keyboard. See diagrams 2386, sheet 1 and 3 for component layout.

Locate monitor board and mount R26 and R73. Both are zero ohm resistors (jumpers).

This will permanently short the ready selector.
The READY LED's will permanently flash.

When power is switched on there is a RISK that the machine enters an un-defined state and only one of the two LED's will flash and if record is entered only one track will go into record.

If this happens:

The un-defined state is caused by some component tolerances.

Locate the Audio Logic/Driver board. See diagram 2384, sheet 1 and 3.

Change value of C8 from 100 nF to 1 µF/35V tantal
Change value of C11 from 100 nF to 1 µF/35V tantal

Make sure the polarity of both capacitors is right.
Plus of C8 shall face toward IC13.
Plus of C11 shall face toward IC18/R55.

Check that actual value of resistors are as listed;
R57 shall be 100 kOhm, if not install correct value.
R52 shall be 1 MOhm, if not install correct value.

Use the machine for a couple of weeks. If both LED's always start flashing at power on the circuit is stable and if desired, the LED's can now be disconnected:

Locate the Audio Logic/Driver board. See diagram 2384, sheet 1 and 3.

Remove or lift one end of resistors R49 and R50. This will permanently disconnect the flashing LED's.

NOTE 1: Do not disconnect the LED's until you are sure both channels go into READY mode EVERY time power is switched on. Without the LED's there is no visible indication that something is wrong with the risk of only recording on one track without indication of this.

NOTE 2: If the modification of the Audio Logic/Driver board can not be done successfully, contact your local dealer or the factory for a factory tested replacement board.

The maximum sensitivity in INPUT VAR mode is approx. 10 dB above that of the INPUT CAL mode. This corresponds to a sensitivity level of approx. 500 mV for an INPUT CAL reference level of 1.55 V.

When recording from a consumer DAT or other hifi equipment a higher sensitivity may be desirable.

The following modification increases the maximum sensitivity in INPUT VAR mode to approx. 150 mV for an INPUT CAL reference level of 1.55 V. (Sensitivity in INPUT CAL mode is not affected).

This is accomplished by connecting 1K resistors in parallel with R3 and R6 on the Monitorboard;

Related drawings: 2378 Audio block diagram
2386/1 Monitor board
2386/3 Monitor board component layout
940410 Circuit layout, solder side

- The Monitorboard forms the lower part of keyboard assembly, which has to be removed. Loosen the 4 screws under the front panel flap and slide the keyboard down. Disconnect the flatcable connectors in both sides.

- Turn the frontpanel upside down and inspect the under-side, which is the solder side of the Monitorboard. The part number of the board is etched along the short left-hand side of the board.

- If the part number is 94022X or 94041X mount the two 1K resistors according to enclosed drawings.

Mount the 1K resistors on the solder side to avoid taking the complete keyboard unit apart.

PART OF 940410

11 SERVICE BULLETINS

Service bulletins will normally not be found in the supplied manual as updates are in production.

Bulletins are released as required and should be filed in section 11 of this manual.

11.1 FRIDA SERVICE BULLETIN

VALIDITY: All models of the Frida recorder with test report dated 1991-03-11 or earlier.

In production after 1991-03-11.

SYMPTOM: Recorder blows 24 V fuse, reel motors dead.

CAUSE: Variations in input capacity between the SIPMOS FET transistors BUZ11.

The transistors are used in the Motor Power Amp, drawing 2391, pcb 94014X.

In a worst case situation this can cause timing error in the switching between T9 and T10 resulting in too much current being passed by the transistors. In most cases T9 will be destroyed causing the fuse to blow.

In some cases L2 may also be affected.

REMEDY: Remove resistor R22.
Change value of resistor R21 from 15 kohm to 1 kohm.

Remove the bottom plate to gain access to the supply motor print. To get access to the take up motor it will be necessary to take the motor assembly out.

PARTS: If not readily available the following parts can be ordered for repair/update:

901210 Resistor 1 kohm
912442 Transistor BUZ 11
907150 Coil L2 40uH/2A
961941 Fuse 4A SB

Encl. Drawing 2391 before and after modification
Component layout

11.2 SERVICE BULLETIN / APPLICATION NOTE 828520

APRIL 92
REV. 0

VALIDITY: All models of the Frida tape recorder.

SUBJECT: Securing position of all pcb's when recorder is mounted in a vertical position. This is particularly important for machines exposed to vibrations, i.e. OB vans.

REMEDY: Install additional print support. Kit # 501209.

INSTALLATION: Remove the sloping bottom cover by loosening the two screws.

Drill four 3.2 mm holes as shown on drawing 2852. The drawing is to scale and can be used as template.

Mount the left and right PCB supports with M3 screws as shown;

Re-install the bottom cover and tighten the 2 screws.

PARTS: The kit # 501209, pcb support contains;

1 828520 position drawing 2852
1 827740 PBC support, right
1 827730 PCB support, left
4 974614 M3 x 6 Allen screw
1 995004 Drill 3.2 mm HSS

11.3 SERVICE BULLETIN

VALIDITY: All models of the Frida recorder with test report dated 1991-12-19 or earlier.

Modification factory installed after 1991-12-19.

SYMPTOM: Recorder blows 24 V fuse, reel motor/motors dead.

CAUSE: Blown SIPMOS FET transistors BUZ11 on the Motor Power Amp, drawing 2391, pcb 94014X.

REMEDY: ON THE COMPONENT SIDE OF THE CIRCUIT BOARD;

1. If mounted, cut out/remove resistor R22 (15k).
2. Check value of resistor R21. If 15 kohm change value to 1 kOhm.
3. Check D3, it should be a zener diode BZX79 18 V.
4. Check that diode D9 is mounted. If not, install D9 between L2 and R25. See drawing.
5. Change value of resistor R23 from 47k to 6k8.
6. Replace resistor R13 with diode D12.
7. Replace resistor R15 with diode D13.
8. Install a new capacitor C28 (1 nF) across R12
9. Install a new capacitor C29 (1 nF) across R14
10. Install 2 new zener diodes D10, D11 back to back between gate and source of T9. See drawing.
11. Cut the circuit track between T9 gate and T11 collector. See drawing.

ON THE SOLDER SIDE OF THE CIRCUIT BOARD;

12. Install new resistor R54, 1 kOhm. Use shrinking flex to eliminate risk for short circuits.

PARTS: If not readily available the following parts can be ordered for repair/update:

R21, R54	# 901210	Resistor 1 kohm
R23	# 901268	Resistor 6.8 kOhm
C28, C29	# 904507	Capacitor 1 nF 20% ceramic
D9, D12, D13	# 911101	Diode 1N4148 or eq
D10, D11	# 911331	Zener diode BZX79 18 V or eq
T9	# 912442	Transistor BUZ 11
L2	# 907150	Coil 40 µH/2A
F1	# 961941	Fuse 4A SB

11.3 THEORY OF MODIFICATION: REF DIAGRAM 2391

Due to the problem of the burn-off of mosfet T9 on the Motor Power Amp board encountered on some Frida recorders, the circuits behaviour in the power up situation has been investigated further.

It has been noted that T9 and T10 can conduct simultaneously when the voltage at IC3 pin 10 is in the region of 3-4 V. In normal operation this is no problem, as the voltage at this point is either 0 or 15 V with a very short switching time.

However, in the power up situation, this voltage can not rise faster than the supply voltage, which needs approx. 25 ms to reach 15 V, which means that the voltage at IC3 pin 10 is in the "dangerous" region for several ms. In this period of time, current is drawn through T9 and T10. Currents of 1.5-2 amps have been measured. This current is very dependent of the gate-source threshold voltage of T10. The lower the threshold voltage the higher the current. Due to the negative temperature coefficient of mosfets, the current increases with decreasing temperature.

As T10 never burns off, the above mentioned phenomena does not thoroughly explain the burn off of T9. The alternative way that current can be drained through T9 is T8. Measurements have shown, that during power up a 5 V pulse with a duration of approx. 6 ms is present at TP3. This voltage is sufficient to turn T8 almost totally on. The reason for this pulse is, that TP3 will follow the rising supply voltage until the point where T2 starts to conduct, thus forcing TP3 to ground. The voltage at IC3 pin 4 also follows the supply voltage during power up, but because of R14 and R15, T2 is not commanded to conduct until the voltage at IC3 pin 4 reaches approx. 7 V.

The cure for the first problem is to alter the ratio between R23 and R24 so T9 is forced in the "off" state before T10 is forced "on". This is done by lowering the value of R23 to 6k8.

The cure for the second problem is to insure that the voltage at TP3 does not reach a level which can turn T8 on during power up. This is accomplished by removing R15, thus making T2 conduct for a voltage at IC3 pin 4 of only approx. 0.7 V. In this way the voltage at TP3 is reduced to a level below 1 V. Removing R15 slows down the switching speed of T2. To overcome this problem a 1 nF capacitor has been added in parallel with R14. To protect T2 against negative base voltages, a diode has been added in R15's place. The same modifications has been done to the circuit around T1.

As an extra security T9 has been protected against large gate-source voltages by adding 2 18 V zener diodes in series between gate and source.

11.4 SERVICE BULLETIN

May 93
REV. 0

VALIDITY: All models of the Frida tape recorder with serial number 9251549 or LOWER.

SUBJECT: Special instructions when installing/replacing MOTOR POWER AMPLIFIER.

Machines with serial number up to 9251549 have the reel motor units mounted galvanically insulated from the chassis (See manual section 7.1.8 for details).

When installing a new MOTOR POWER AMPLIFIER (#451515) with pcb number 940146 or higher it is necessary to connect motor chassis to pcb ground.

WARNING: If this connection is not done static charge build-up may occur when tape is running and the following dis-charge can result in destruction of the circuit board.

INSTALLATION: Connect a wire (approx. 0.5 mm2 gauge) to connector J2 pin 2 on the pcb.

Terminate other end of the wire with a soldering lug and connect it to the nearest of the 4 nuts holding the motor. Secure by fastening the nut.

12. DRAWINGS

No	Title	Size
2392	Power supply	A3>A4
2486	Tape transport, block diagram	A3>A4
2388-1	Tape servo control	A3>A4
2388-2	Tape servo control, component layout	A4
2388-3	Tape servo control, component list	A4
2391-1	Motor power amplifier	A3>A4
2391-2	Motor power amplifier, component layout	A4
2391-3	Motor power amplifier, component list	A4
2389-1	Capstan servo	A3>A4
2389-2	Capstan servo, component layout	A4
2389-3	Capstan servo, component list	A4
2384-1	Audio logic / driver board, audio logic	A3/A4
2384-2	Audio logic / driver board, solenoid driver	A3/A4
2384-3	Audio logic / driver board, component layout	A4
2384-4	Audio logic / driver board, component list	A4
2395-1	Tape timer/Logic sensor	A3>A4
2395-2	Tape timer/Logic sensor, component layout	A4
2395-3	Tape timer/Logic sensor, component list	A4
2517-1	Motherboard	A3>A4
2517-2	Motherboard, component layout	A3>A4
2733	Motherboard, connection list, 4 pages	A4
2390-1	Logic board	A3>A4
2390-2	Logic board, component layout	A4
2393-1	Front panel board	A3>A4
2393-2	Front panel board, component layout	A3>A4
2378	Audio block diagram	A3>A4
2379-1	Audio board, play amp	A3>A4
2379-2	Audio board, record amp	A3>A4
2379-3	Audio board, bias ch 1	A3>A4
2379-4	Audio board, bias ch 2	A3>A4
2379-5	Audio board, erase amp	A3>A4
2379-6	Audio board, component layout	A3>A4
2386-1	Monitor board, audio section	A3>A4
2386-2	Monitor board, PPM section	A3>A4
2386-3	Monitor board, component layout	A3>A4
2383-1	Input/output board, input circuit	A3>A4
2383-2	Input/output board, output circuit	A3>A4
2383-3	Input/output board, component layout	A3>A4
2485-1	XLR Connector board	A4
2485-2	XLR Connector board, component layout	A4
2385-1	Potentiometer board	A4
2385-2	Potentiometer board, component layout	A4
2491	Pcb and trimmer locations	A3>A4
	OPTIONS/ACCESSORIES;	
2646	Installation of carrying handle	A4
2647	Installation of rack kit	A4
2722	Remote control	A4
2561-1	TC Board, play/rec/erase	A3>A4
2561-2	TC Board, control circuit	A3>A4
2561-3	TC Board, component layout	A4
2576-1	Fostex 4030 interface	A3>A4
2576-2	Fostex 4030 interface, component layout	A3>A4
2576-3	Fostex 4030 interface, component list	A4
2665	Z-3 interface cable	A4
3056	ES1-11 interface cable	A4
2667-1	Console; VU panel board	A3>A4
2667-2	Console; VU panel board, component layout	A3>A4

2667-3	Console; VU panel board, component list	A3>A4
2674-1	Console; panel amplifier	A3>A4
2674-2	Console; panel amplifier, component layout	A3>A4
2674-3	Console; panel amplifier, component list	A3>A4
2675-1	Console; switch board	A3>A4
2675-2	Console; switch board, component layout	A3>A4
2675-3	Console; switch board, component list	A3>A4
2903	Floorstand, assembly instructions	A4

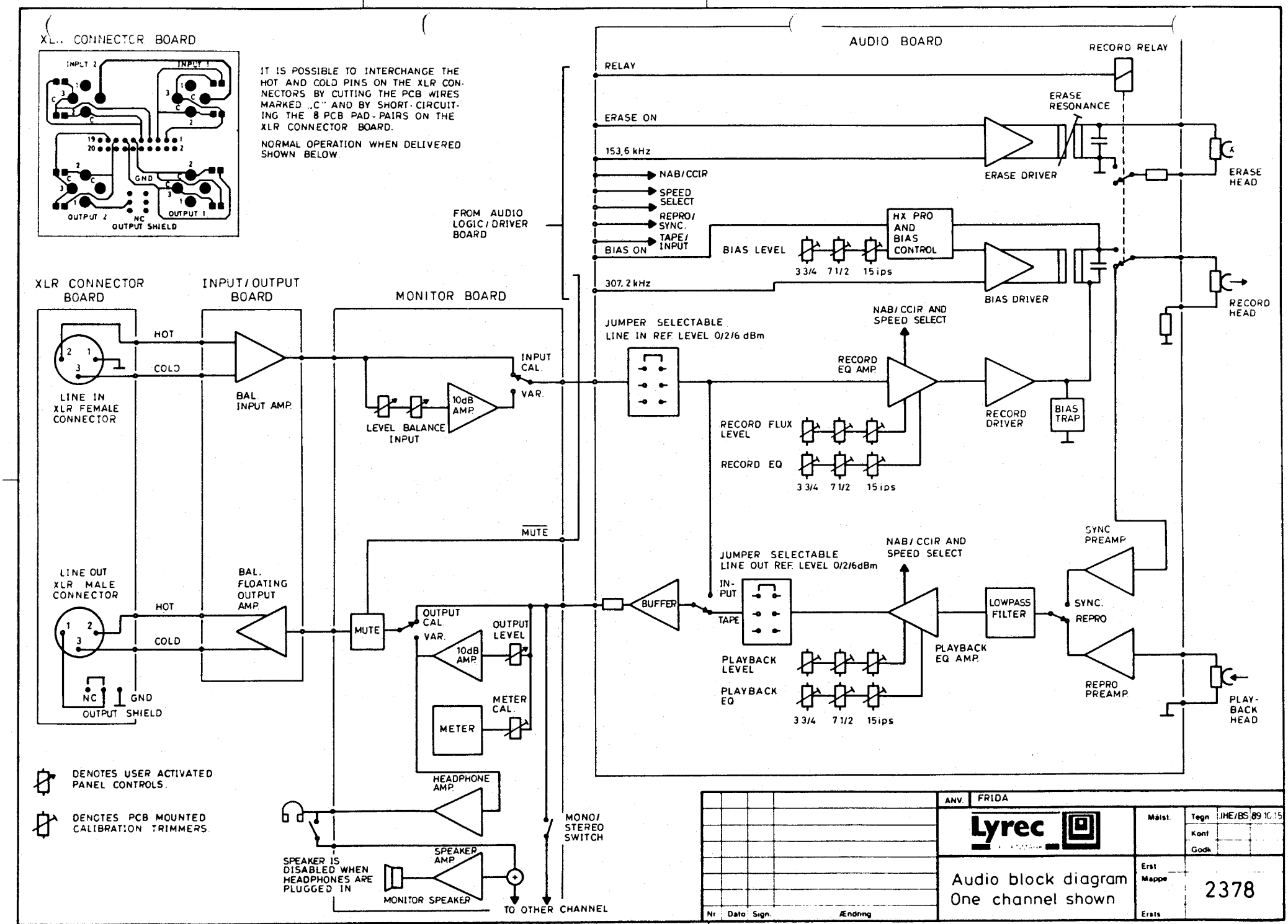
XLR CONNECTOR BOARD
INPUT 2
INPUT 1
GND
OUTPUT 2
NC
OUTPUT SHIELD
OUTPUT 1
IT IS POSSIBLE TO INTERCHANGE THE HOT AND COLD PINS ON THE XLR CONNECTORS BY CUTTING THE PCB WIRES MARKED „C" AND BY SHORT-CIRCUITING THE 8 PCB PAD-PAIRS ON THE XLR CONNECTOR BOARD.
NORMAL OPERATION WHEN DELIVERED SHOWN BELOW.
AUDIO BOARD
RELAY
RECORD RELAY
ERASE ON
ERASE RESONANCE
153,6 kHz
ERASE DRIVER
ERASE HEAD
NAB/CCIR
SPEED SELECT
REPRO/SYNC.
TAPE/INPUT
BIAS ON
FROM AUDIO LOGIC/DRIVER BOARD
HX PRO AND BIAS CONTROL
BIAS LEVEL
3 3/4
7 1/2
15 ips
307,2 kHz
BIAS DRIVER
RECORD HEAD
XLR CONNECTOR BOARD
INPUT/OUTPUT BOARD
MONITOR BOARD
HOT
COLD
LINE IN XLR FEMALE CONNECTOR
BAL INPUT AMP.
INPUT CAL.
VAR.
LEVEL BALANCE INPUT
10dB AMP.
JUMPER SELECTABLE LINE IN REF. LEVEL 0/2/6 dBm
NAB/CCIR AND SPEED SELECT
RECORD EQ AMP.
RECORD DRIVER
BIAS TRAP
RECORD FLUX LEVEL
RECORD EQ
MUTE
LINE OUT XLR MALE CONNECTOR
BAL. FLOATING OUTPUT AMP.
NC
GND
OUTPUT SHIELD
OUTPUT CAL.
OUTPUT LEVEL
METER CAL.
METER
JUMPER SELECTABLE LINE OUT REF. LEVEL 0/2/6dBm
IN-PUT
TAPE
BUFFER
PLAYBACK LEVEL
PLAYBACK EQ
PLAYBACK EQ AMP.
LOWPASS FILTER
SYNC PREAMP.
SYNC.
REPRO
REPRO PREAMP.
PLAY-BACK HEAD
DENOTES USER ACTIVATED PANEL CONTROLS.
DENOTES PCB MOUNTED CALIBRATION TRIMMERS.
HEADPHONE AMP.
MONO/STEREO SWITCH
SPEAKER IS DISABLED WHEN HEADPHONES ARE PLUGGED IN
SPEAKER AMP.
MONITOR SPEAKER
TO OTHER CHANNEL
ANV. FRIDA
Lyrec
Tegn JHE/BS 89.10.15
Kont
Godk
Audio block diagram
One channel shown
2378
Nr. Dato Sign. Ændring

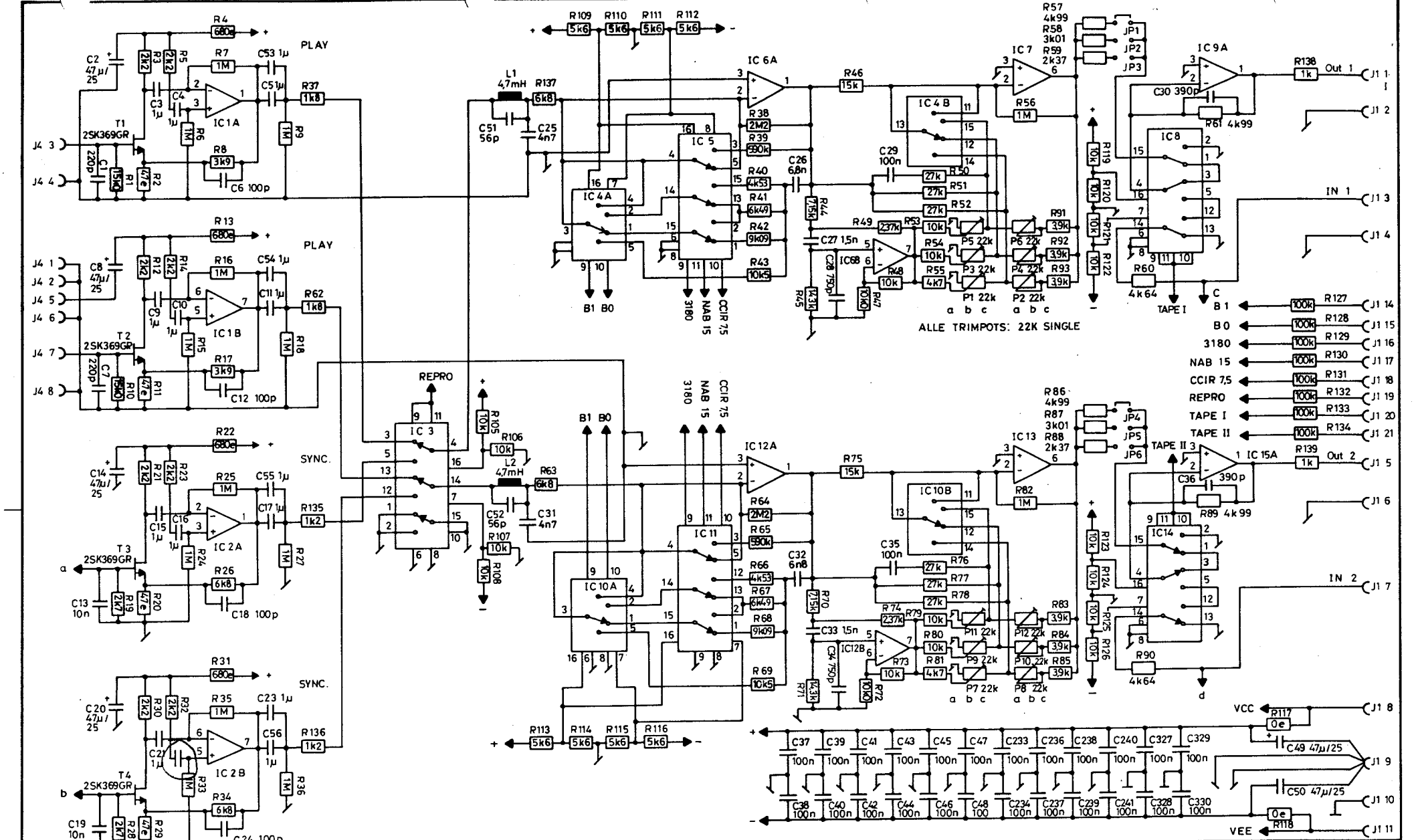

IC1 - 2 - 9 - 12 - 15 - 17 - 22 - 25 - 29: TL072, + AT PIN 8, AT PIN 4.
IC7 - 13: TL071, + AT PIN 7, - AT PIN 4.
IC 24: LM339, + AT PIN 3, - AT PIN 12.
IC 27, 30: TL072, VCC AT PIN 8, VEE AT PIN 4.
IC19 - 23: LF411, + AT PIN 7, AT PIN 4.

C22

Nr.	Dato	Sign.	Ændring
4	92.01	JHE	Ny rev. udg.
3	91.04	JHE	Comp.værdi ændr. Note tilf.
2	90.09	JHE	Componentværdi ændr.
1	90.01	JHE	DIV. ÆNDR.

ANV. FRIDA

Lyrec OF DENMARK

Audioboard
Playamp.

Målst.	Tegn.	JHE. BS	89.06.01
	Konf.		
	Godk.		
Erst.			
Mappe	2379		
	Sheet 1 of 7		

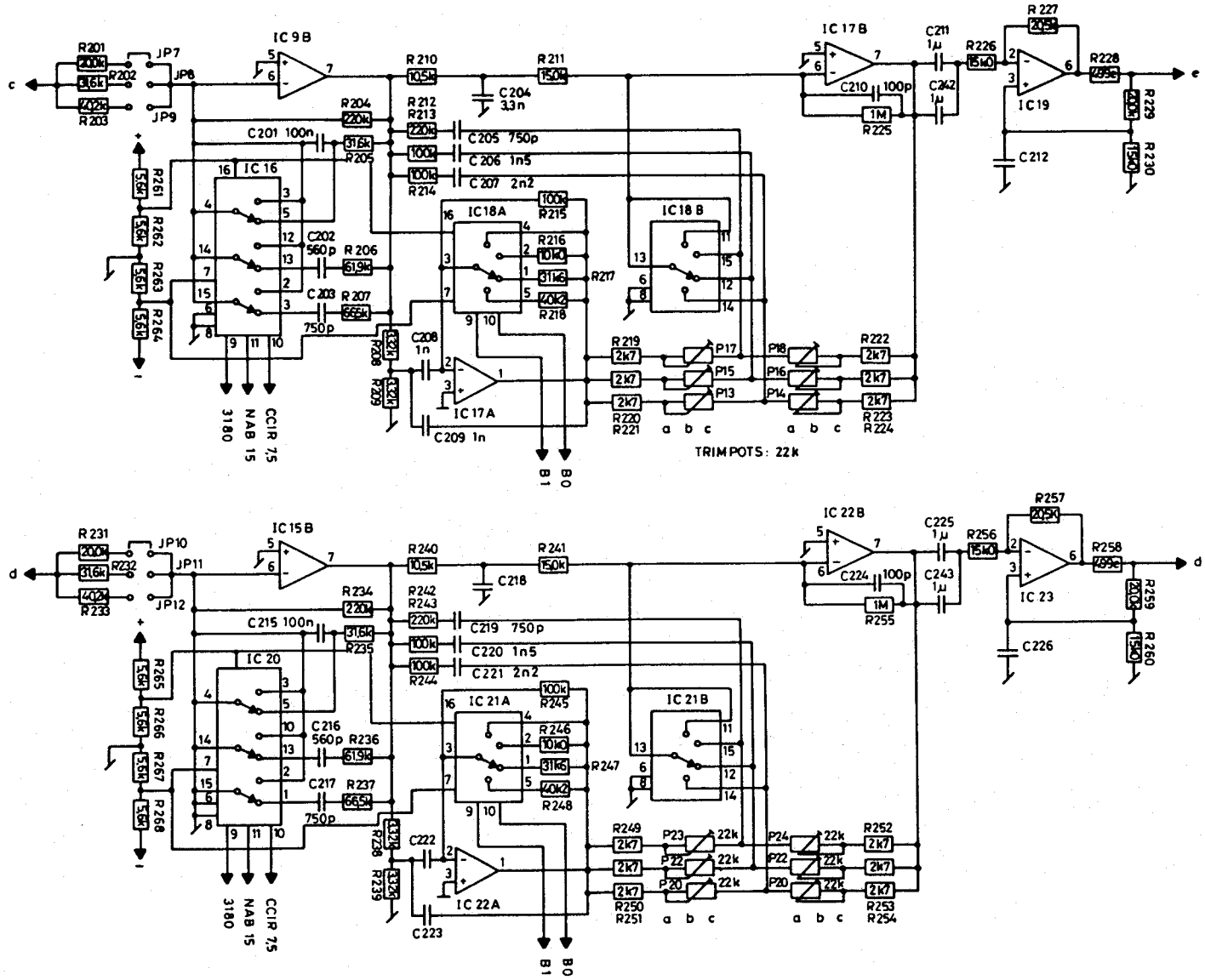

Nr.	Dato	Sign.	Ændring
2	90.09	JHE	Componentvoerdi ændr.
1	90.01	JHE	DIV. ÆNDR.

ANV. FRIDA

Lyrec OF DENMARK

Audioboard
Recordamp.

Målst.	Tegn.	JHE	89.06.0
	Konf.		
	Godk.		
Erst.			
Mappe	2379		
	Sheet 2 of 7		

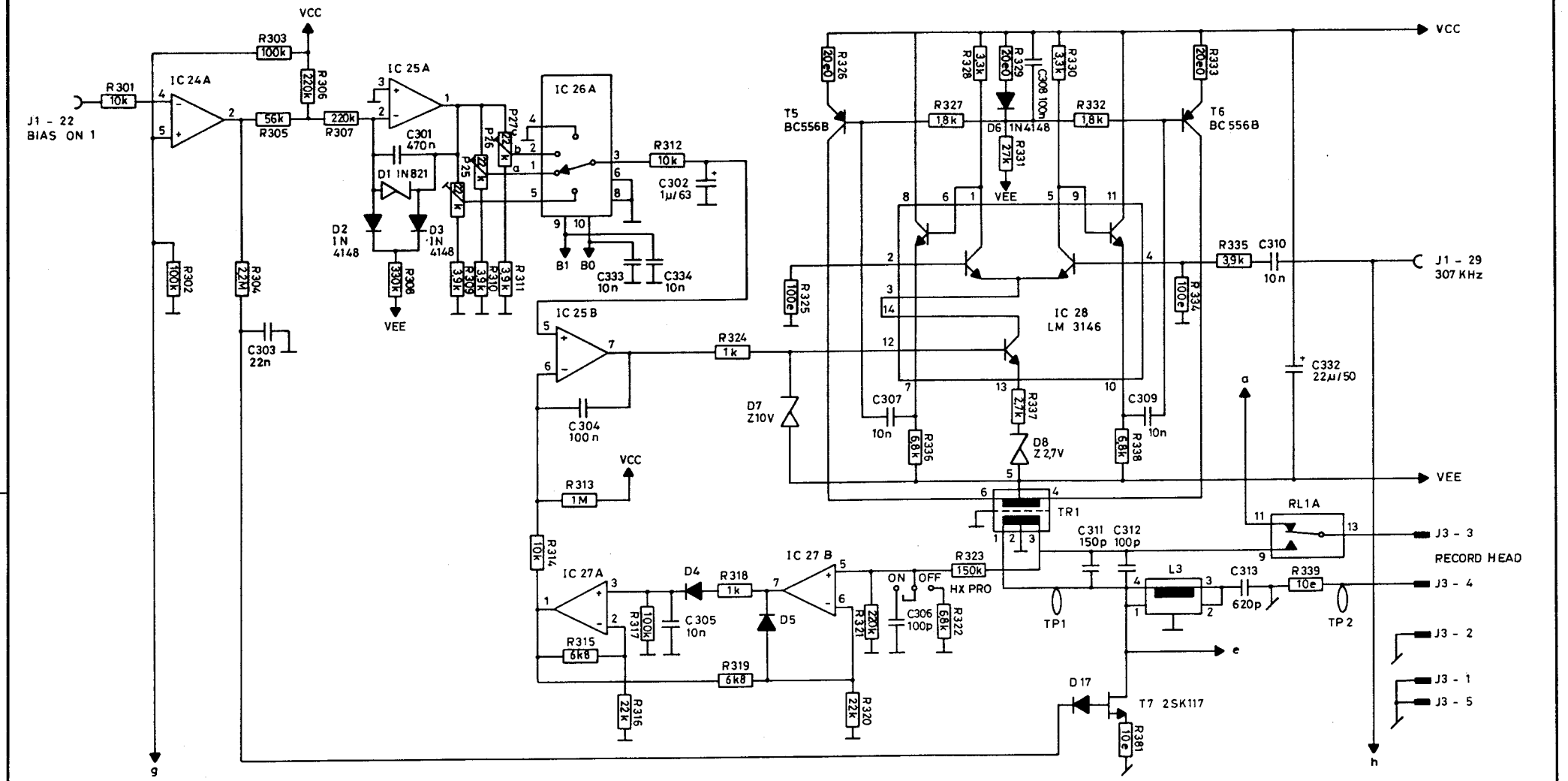

Nr.	Dato	Sign.	Ændring
3	91.01.	JHE	R315 - R319 15k → 6k8
2	90.09	JHE	C333,C334,tilf.Componentv.ændr.
1	90.01	JHE	DIV. ÆNDR.

ANV. FRIDA

Lyrec OF DENMARK

Audioboard
Bias Ch. 1

Målst.	Tegn.	JHE/BS 89.08.15
	Konf.	
	Godk.	
Erst.		
Mappe	2379	
	Sheet 3 of 7	

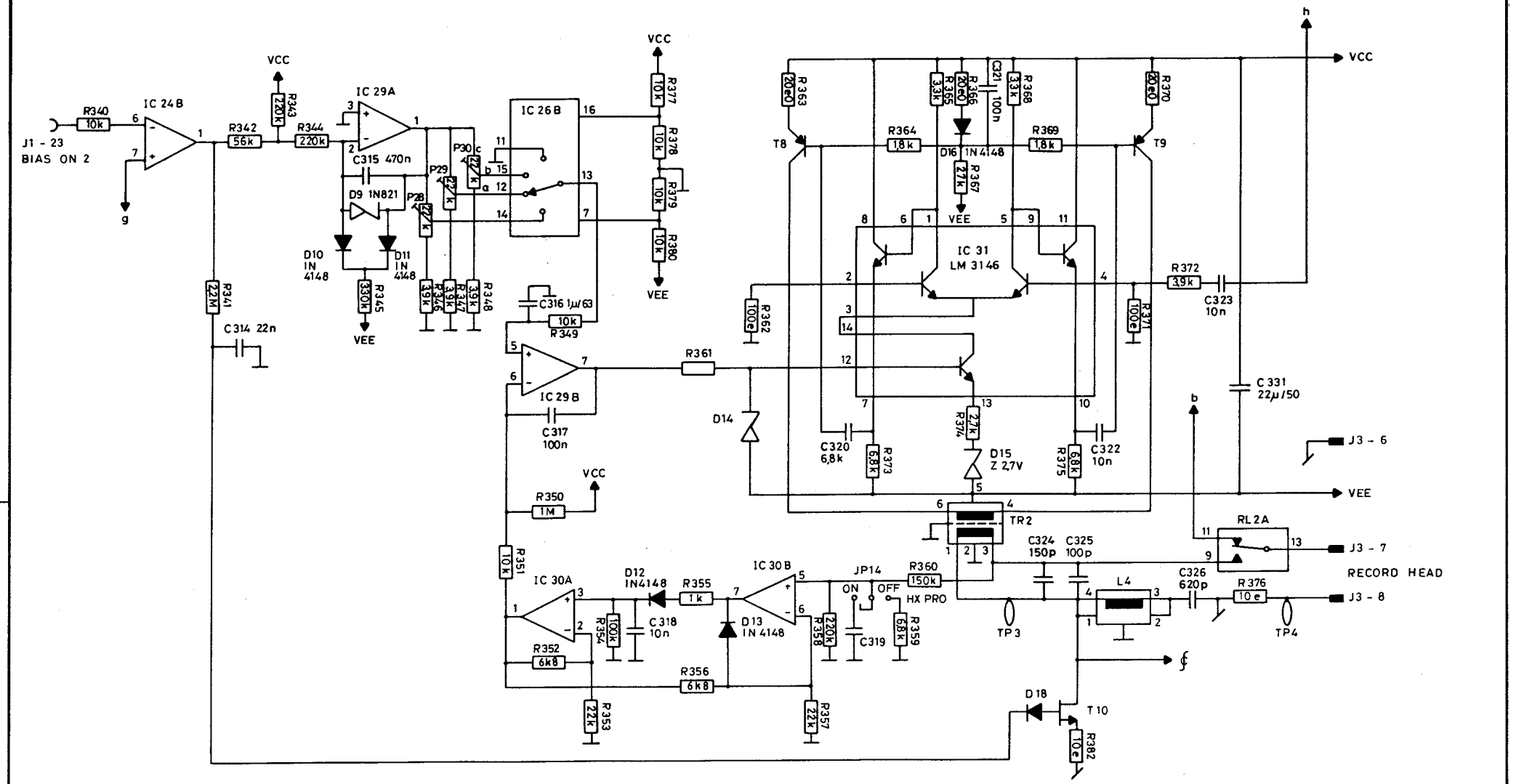

Nr.	Dato	Sign.	Ændring
2	91.01.	JHE	R352 R356 15k → 6k8
1	90.09	JHE	Componentværdi ændr.

ANV. FRIDA

Lyrec OF DENMARK

Audioboard
Bias Ch. 2

Målst.	Tegn.	JHE/BS	89.08.10
	Konf.		
	Godk.		
Erst.			
Mappe	2379		
	Sheet 4 of 7		

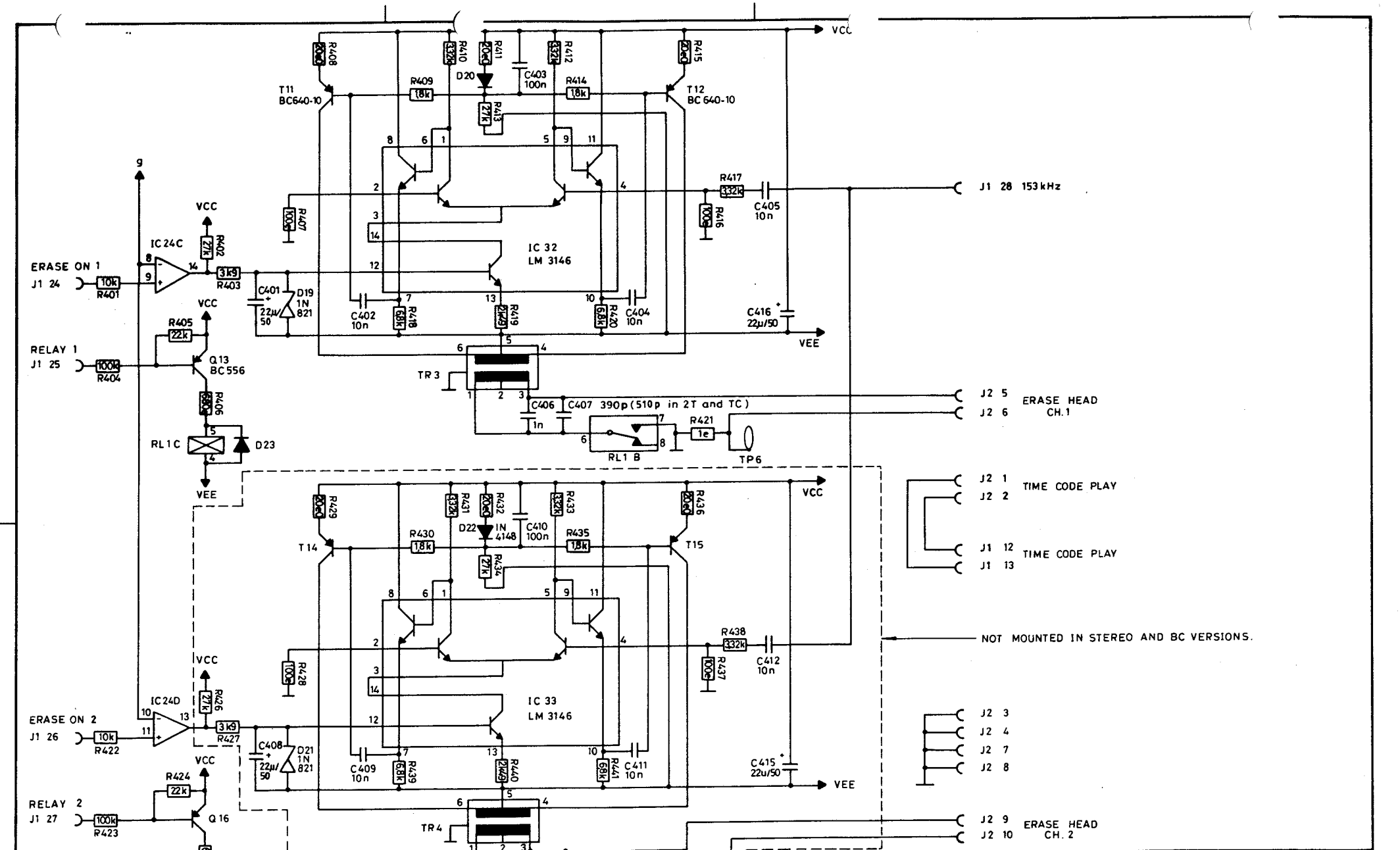
VCC
R408 20k
R410 332k
R411 20k
R412 332k
R415 20k
D20
C403 100n
R409 18k
R414 18k
T11 BC640-10
T12 BC 640-10
R413 27k
R417 332k
C405 10n
R416 100k
J1 28 153kHz
R407 100k
IC 32 LM 3146
IC 24C
R402 27k
ERASE ON 1
J1 24
10k R401
3k9 R403
C401 22µ/50
D19 1N 821
C402 10n
R418 68k
R419 27k
R420 68k
C404 10n
C416 22µ/50
VEE
R405 22k
RELAY 1
J1 25
100k R404
Q13 BC556
R406 680
RL1C
D23
TR3
C406 1n
C407 390p (510p in 2T and TC)
J2 5
J2 6
ERASE HEAD CH.1
R421 1e
RL1 B
TP6
J2 1
J2 2
TIME CODE PLAY
J1 12
J1 13
TIME CODE PLAY
NOT MOUNTED IN STEREO AND BC VERSIONS.
R429 20k
R431 332k
R432 20k
R433 332k
R436 20k
D22 1N 4148
C410 100n
R430 1,8k
R435 1,8k
T14
T15
R434 27k
R438 332k
C412 10n
R437 100k
R428 100k
IC 33 LM 3146
IC 24D
R426 27k
ERASE ON 2
J1 26
10k R422
3k9 R427
C408 22µ/50
D21 1N 821
C409 10n
R439 68k
R440 27k
R441 68k
C411 10n
C415 22u/50
VEE
J2 3
J2 4
J2 7
J2 8
R424 22k
RELAY 2
J1 27
100k R423
Q 16
680
RL2C
D24
TR4
C413 1n
C414 510p
J2 9
J2 10
ERASE HEAD CH. 2
R442 1e
RL 2 B
TP5
TP7
ANV. FRIDA
Lyrec OF DENMARK
Audioboard
Erase amp.
Målst.
Tegn. JHE/BS 89.0601
Konf.
Godk.
Erst.
Mappe
2379
Sheet 5 of 7
Nr. Dato Sign. Ændring
4 92.01. JHE C401+C408 10µ/35→22µ/50, 150→510p
3 91.04 JHE Mounted in stereo and BC Versions tilf.
2 90.09 JHE R408, 411, 415, 429, 432, 436 voerdi ændi
1 90.01 JHE

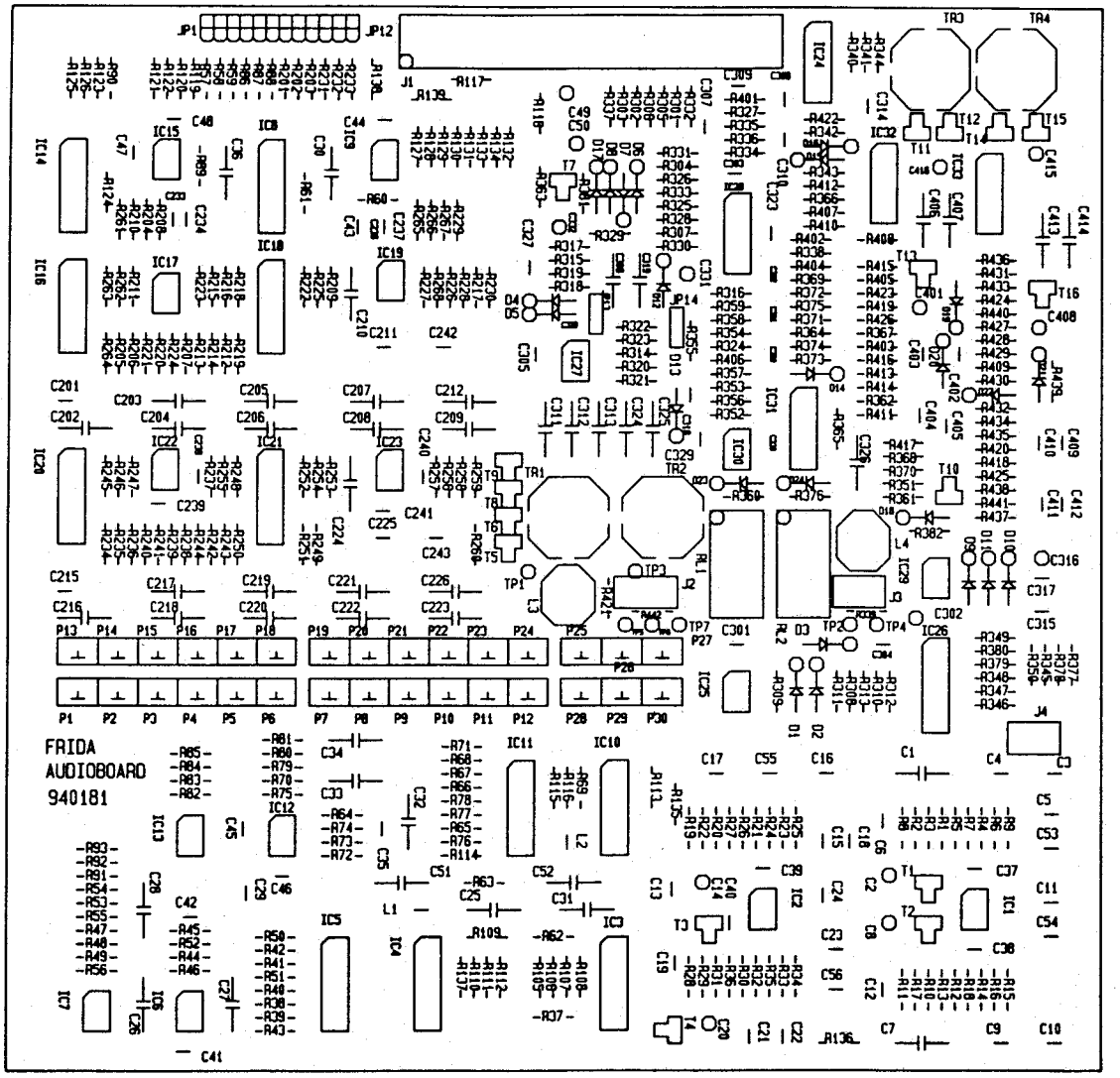

Nr	Dato	Sign	Ændring

ANV. FRIDA

Lyrec DENMARK

Audioboard
Component layout

Målst.	Tegn.	JHE	BS 90.03
	Kont.		
	Godk.		
Erst.			
Mappe	2379		
	Sheet 6 of 7		

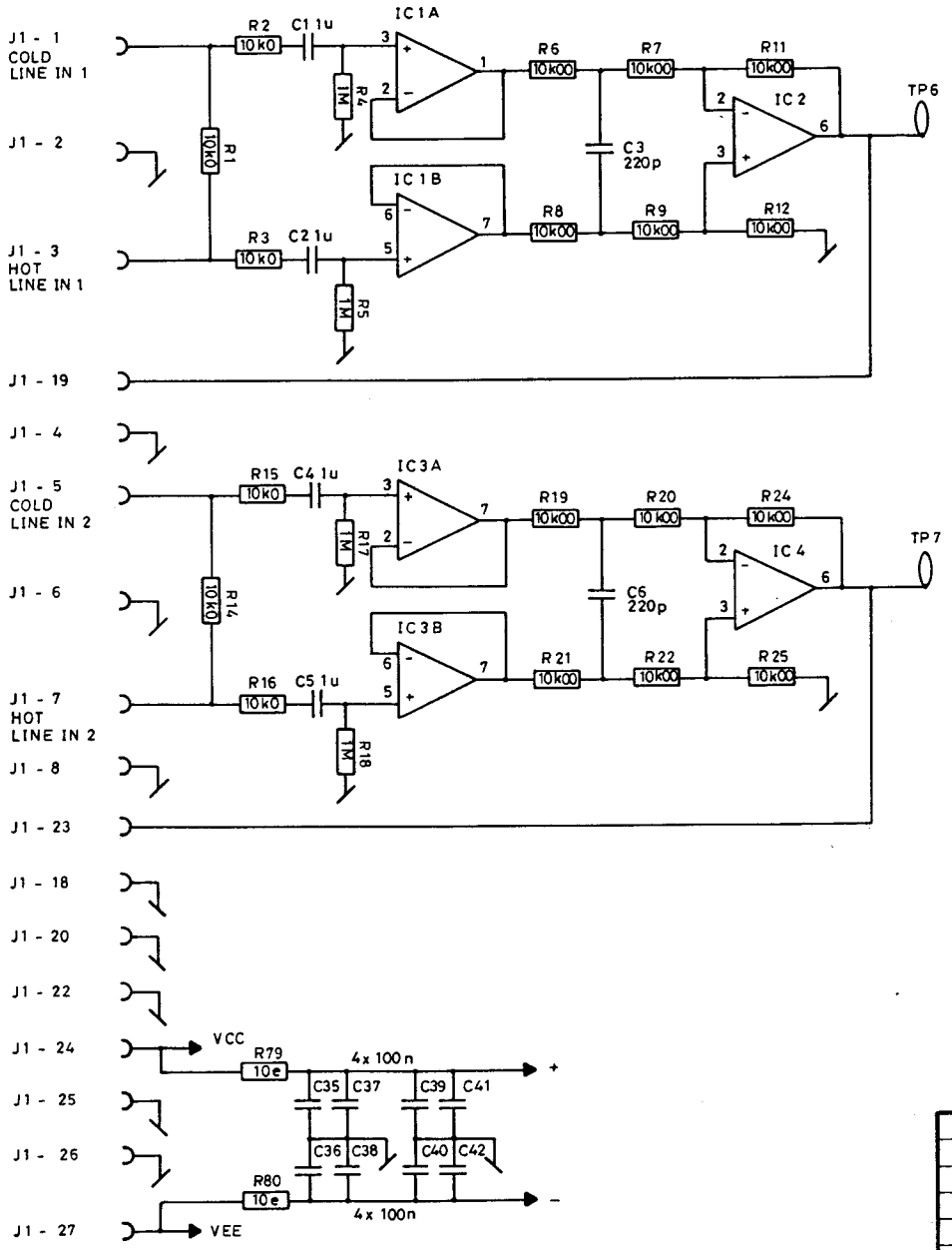

NOTE:
R6 - R9 - R11 - R12 - R19 - R22 - R24 - R25 HAVE 0,1 % TOLERANCE:
IC1, 3, 5, 6, 7, 8: TL 072, + at pin 8, - at pin 4.
IC 2, 4: TL 071, + at pin 7, - at pin 4.

Nr.	Dato	Sign.	Ændring
1	90.09	JHE	Tekst i note tilf.

ANV. FRIDA

Lyrec OF DENMARK

Input/Output board
Input circuitry

Målst.	Tegn.	JHE/BS	89.10.19
	Konf.		
	Godk.		
Erst.			
Mappe	2383		
	Sheet 1 of 4		

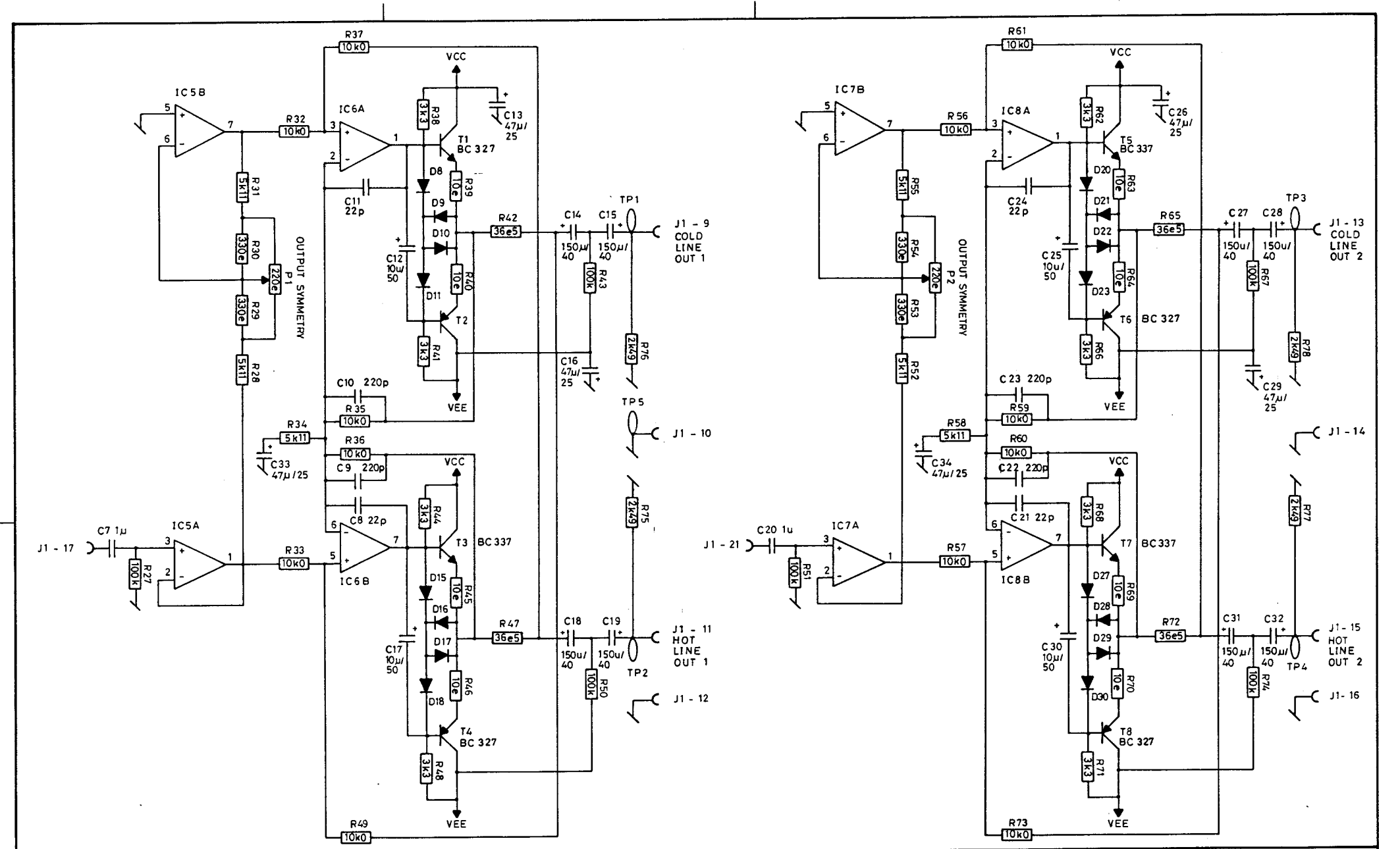

Nr.	Dato	Sign.	Ændring

ANV. FRIDA

Lyrec OF DENMARK

Input/Output board
Output circuitry

Målst.	Tegn.	JHE/BS	89.10.19
	Konf.		
	Godk.		
Erst.			
Mappe	2383		
	Sheet 2 of 4		

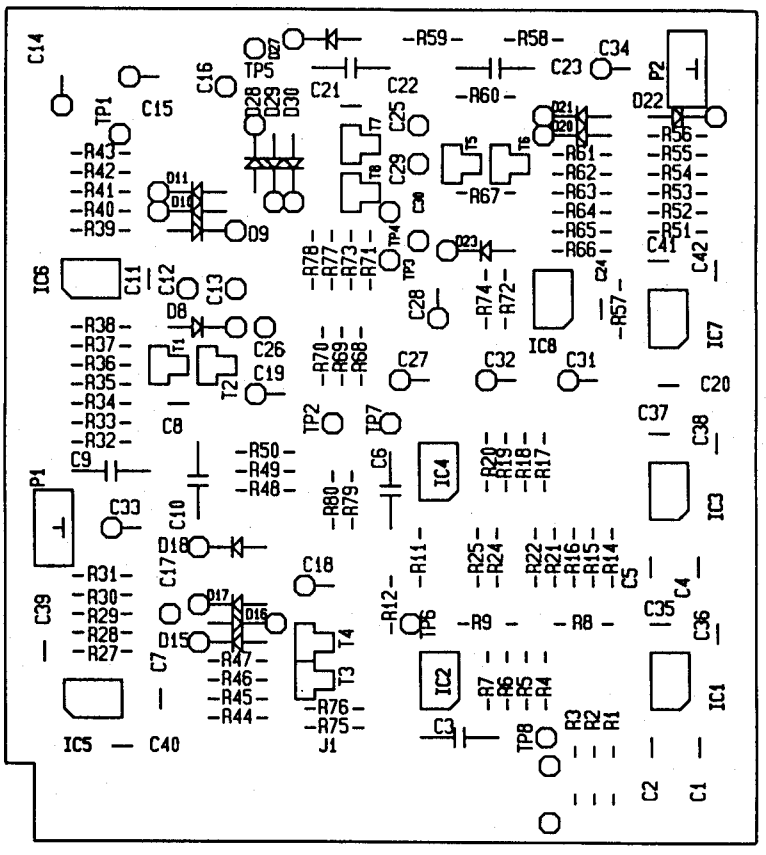

				ANV.	FRIDA			
				Lyrec OF DENMARK		Målst.	Tegn.	JHE.BS 90.03.
							Konf.	
							Godk.	
				Input / Output Board Component layout		Erst.		
						Mappe	2383	
Nr.	Dato	Sign.	Ændring				Sheet 3 of 4	

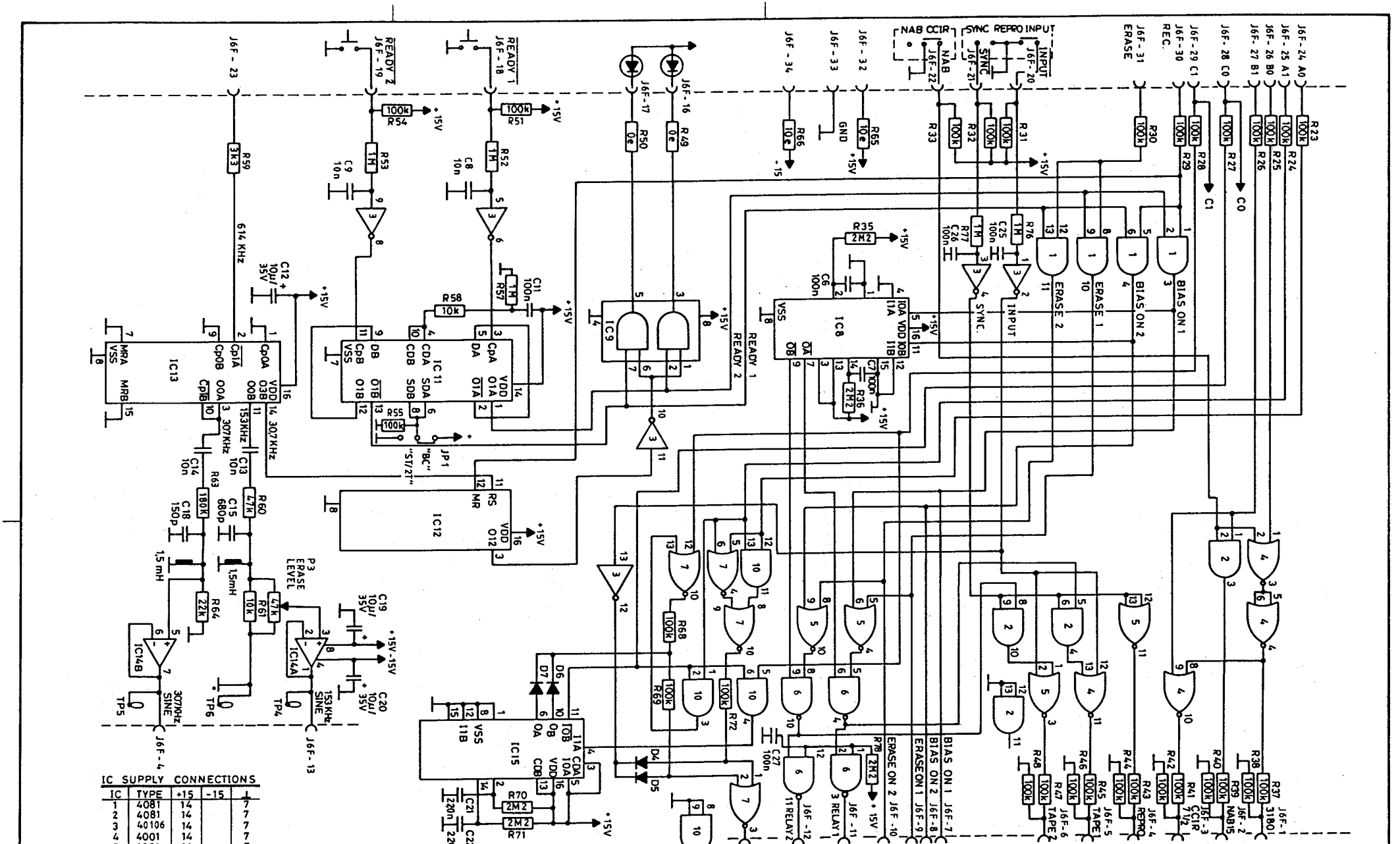

IC	SUPPLY CONNECTIONS			
IC	TYPE	+15	-15	⊥
1	4081	14		7
2	4081	14		7
3	40106	14		7
4	4001	14		7
5	4001	14		7
6	4093	14		7
7	4001	14		7
8	4538	16		8
9	40107	8		4
10	4081	14		7
11	4013	14		7
12	4060	16		8
13	4518	16		8
14	TL072	8		4
15	4538	16		8
16	LM324	4	11	

NOTE: AUDIO MUTE OUTPUT IS NOT USED IN NEW FRIDA VERSIONS.

Nr	Dato	Sign.	Ændring
3	92.06	JHE	NY REV. UDG.
2	91.04	JHE	R55 10k → 100k IC13 tilf. 9,2
1	90.09	JHE	Ændr. IC14 → 13, 13 → 15, 15AB → 14AB

ANV. FRIDA

Lyrec

Audio Logic Driver Board

Målst.

Tegn. JHE.BS 90.03

Kont.

Godk.

Erst.

Mappe 2384

Sheet 1 of 4

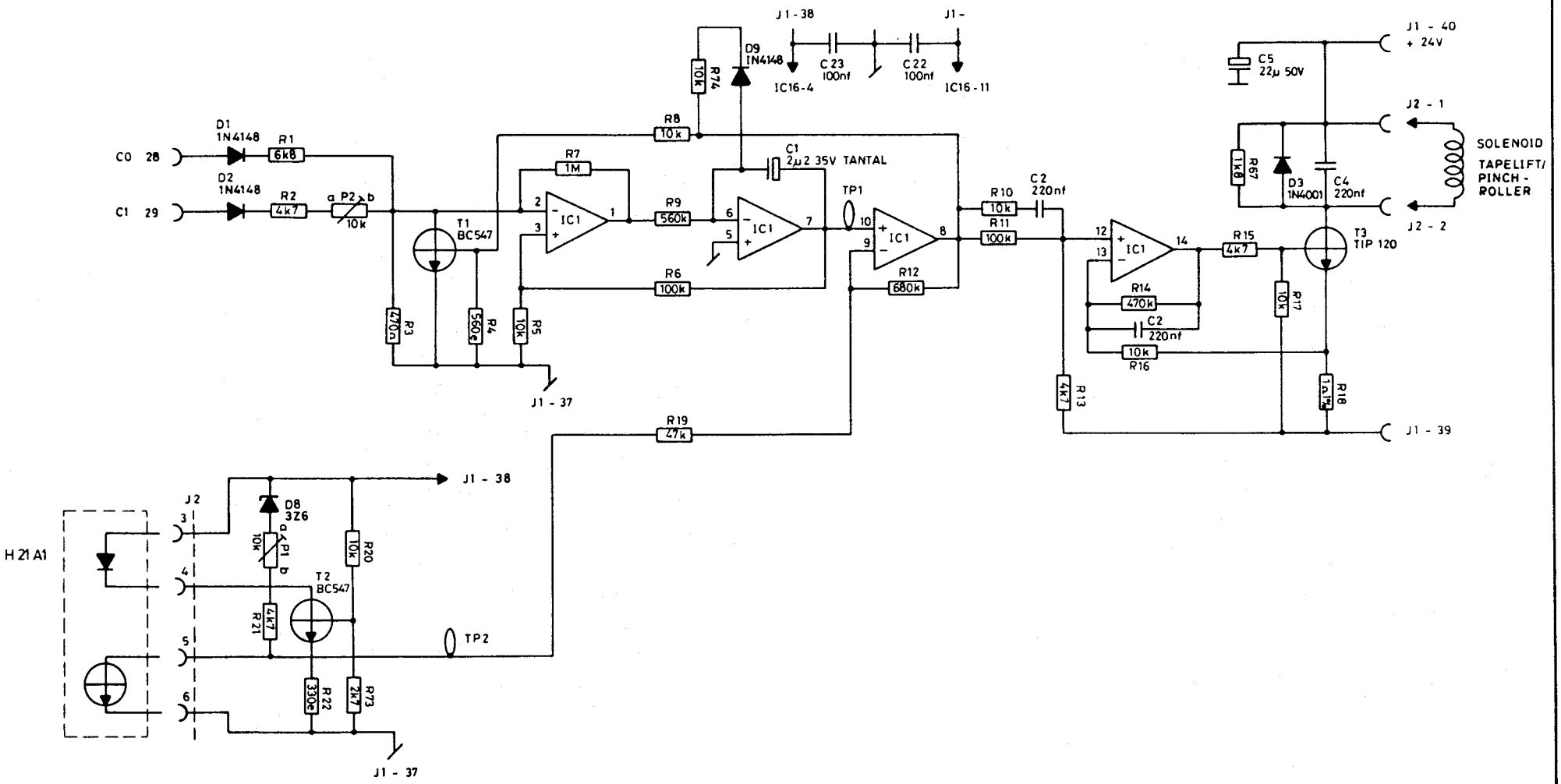

Nr.	Dato	Sign.	Ændring
2	91.01	ReS	R10 15k → 6k8, D9 & R74 tilf.
1	90.08	ReS	Diode D8 TILF.

ANV. FRIDA

Lyrec
DANMARK

Audio Logic
Driver Board

Målst.	Tegn.	ReS/BS	89.06.15
	Kont.		
	Godk.		
Erst.			
Mappe	2384		
	Sheet 2 of 4		

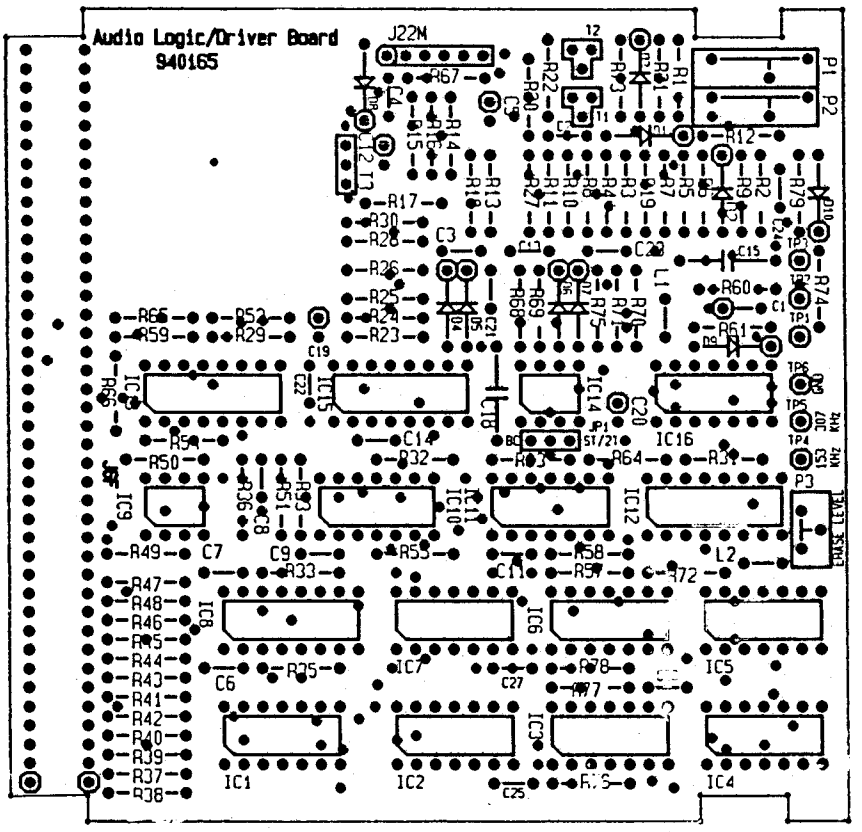

				ANV.	FRIDA			
				Lyrec		Målst.	Tegn.	JHE.BS 92. 11.
							Konf.	
							Godk.	
				Audio Logic Driver Board		Erst.		
						Mappe	2384	
3	92.11	JHE	NY REV. UDG. 940165			Ersts.	SHEET 3 OF 4	
Nr.	Dato	Sign.	Ændring					

COMPONENT LIST

R1	6K8	R35	2M2	R70	2M2	C1	2U2/35V	L1	1,5MH	IC1	4081
R2	4K7	R36	2M2	R71	2M2	C2	220N	L2	1,5MH	IC2	4081
R3	470E	R37	100K	R72	100K	C3	4N7			IC3	40106
R4	560E	R38	100K	R73	2K7	C4	220N			IC4	4001
R5	10K	R39	100K	R74	10K	C5	22U/50V	D1	1N4148	IC5	4001
R6	100K	R40	100K	R75	220K	C6	100N	D2	1N4148	IC6	4093
R7	1M	R41	100K	R76	1M	C7	100N	D3	1N4001	IC7	4001
R8	10K	R42	100K	R77	1M	C8	10N	D4	1N4148	IC8	4538
R9	560K	R43	100K	R78	2M2	C9	10N	D5	1N4148	IC9	40107
R10	10K	R44	100K	R79	150K	C11	100N	D6	1N4148	IC10	4081
R11	100K	R45	100K			C12	10U/35V	D7	1N4148	IC11	4013
R12	680K	R46	100K			C13	10N	D8	BZX79 3V6	IC12	4060
R13	4K7	R47	100K	P1	10K MULTI	C14	10N	D9	1N4148	IC13	4518
R14	470K	R48	100K	P2	10K MULTI	C15	680P	D10	1N4148	IC14	TL072
R15	4K7	R49	0E	P3	47K	C18	150P			IC15	4538
R16	10K	R50	0E			C19	10U/35V			IC16	LM324
R17	10K	R51	100K			C20	10U/35V	T1	BC547		
R18	1E0 1%	R52	1M			C21	220N	T2	BC547		
R19	47K	R53	1M			C22	220N	T3	TIP120		
R20	10K	R54	100K			C23	100N				
R21	4K7	R55	100K			C24	100N				
R22	330E	R57	1M			C25	100N				
R23	100K	R58	10K			C26	100N				
R24	100K	R59	3K3			C27	100N				
R25	100K	R60	47K								
R26	100K	R61	10K								
R27	100K	R63	180K								
R28	100K	R64	22K								
R29	100K	R65	10E								
R30	100K	R66	10E								
R31	100K	R67	1K8								
R32	100K	R68	100K								
R33	100K	R69	100K								

940165	REV. 3	REV. 3	REV. 2	REV. 3
PCB	SHEET 1	SHEET 2	SHEET 3	SHEET 4
MATCHING CONFIGURATIONS				

3	9208	JHE	COMP.LIST ADDED
NR.	DATO	SIGN.	AENDRING

ANV. FRIDA 2384C3

LYREC
OF DENMARK

AUDIOLOGIC/
DRIVER BOARD

# MÅLST.	TEGN.	JHE	9208
	KONF.		
	GODK.		
ERST.			
MAPPE	2384		
ERSTS.	SHEET 4 OF 4		

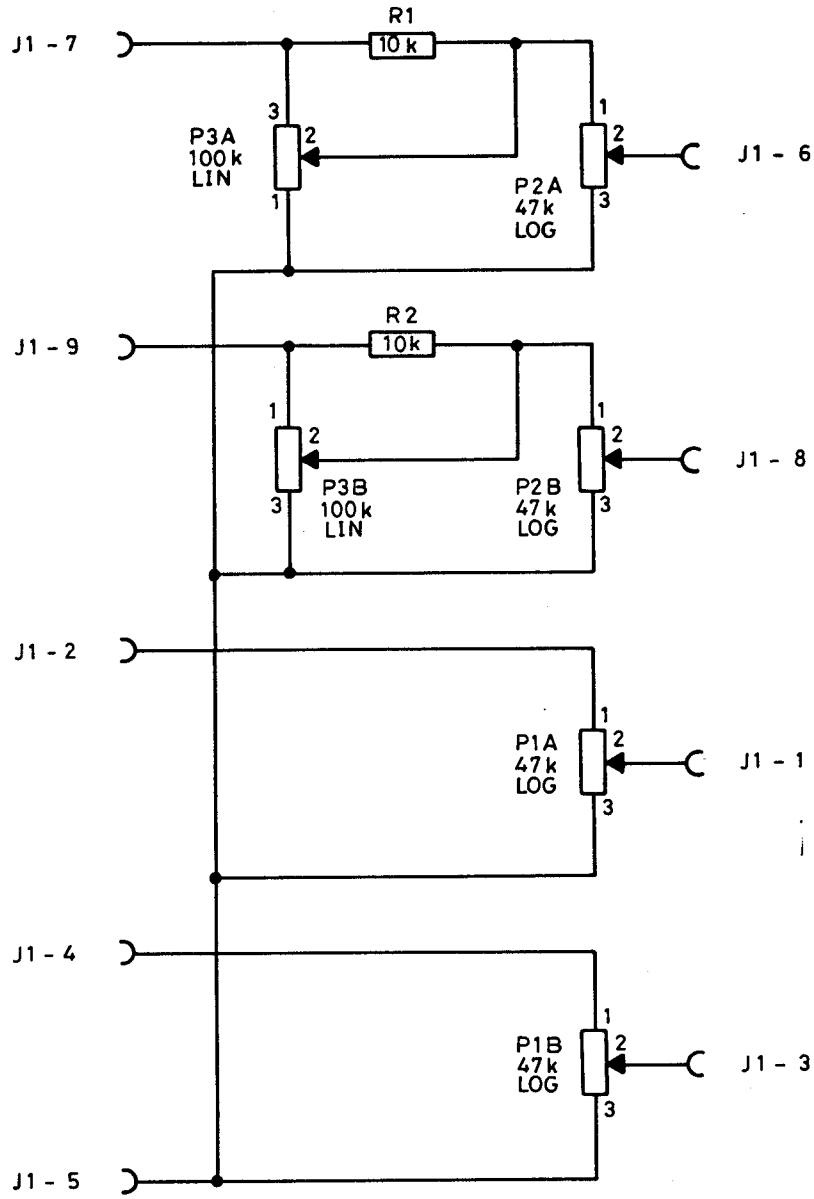

NOTE: R1, R2, P2 AND P3 NOT MOUNTED IN BC VERSION.

Nr.	Dato	Sign.	Ændring

ANV. FRIDA

Lyrec OF DENMARK

Potmeter Board

Målst.	Tegn.	JHE.BS	90.01.12
	Konf.		
	Godk.		
Erst.			
Mappe	2385		
	Sheet 1 of 3		

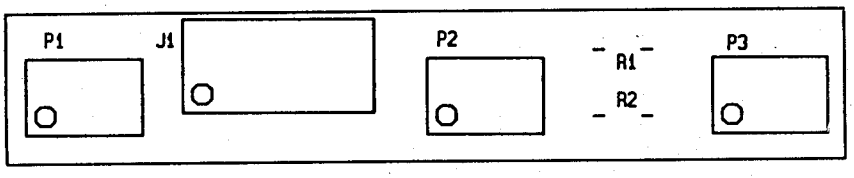

				ANV.	FRIDA			
				Lyrec OF DENMARK		Målst.	Tegn.	JHE.BS 90.03
							Konf.	
							Godk.	
				Potmeter Board Component layout		Erst.		
						Mappe	2385	
Nr.	Dato	Sign.	Ændring				Sheet 2 of 3	

COMPONENT LIST

R1	10K
R2	10K
P1	47K LOG. STEREO
P2	47K LOG. STEREO
P3	100K LIN. STEREO

NOTE: R1, R2, P2 AND P3 ARE NOT MOUNTED IN BC VERSION.

940211	REV. 0	REV. 0	REV. 0
PCB	SHEET 1	SHEET 2	SHEET 3
MATCHING CONFIGURATIONS			

				ANV.	FRIDA	2385C0	
				LYREC OF DENMARK	* MALST.	TEGN.	JHE	9301
						KONF.		
						GODK.		
				POTMETER BOARD	ERST.		
					MAPPE	2385	
NR.	DATO	SIGN.	AENDRING		ERSTS.	SHEET 3 OF 3	

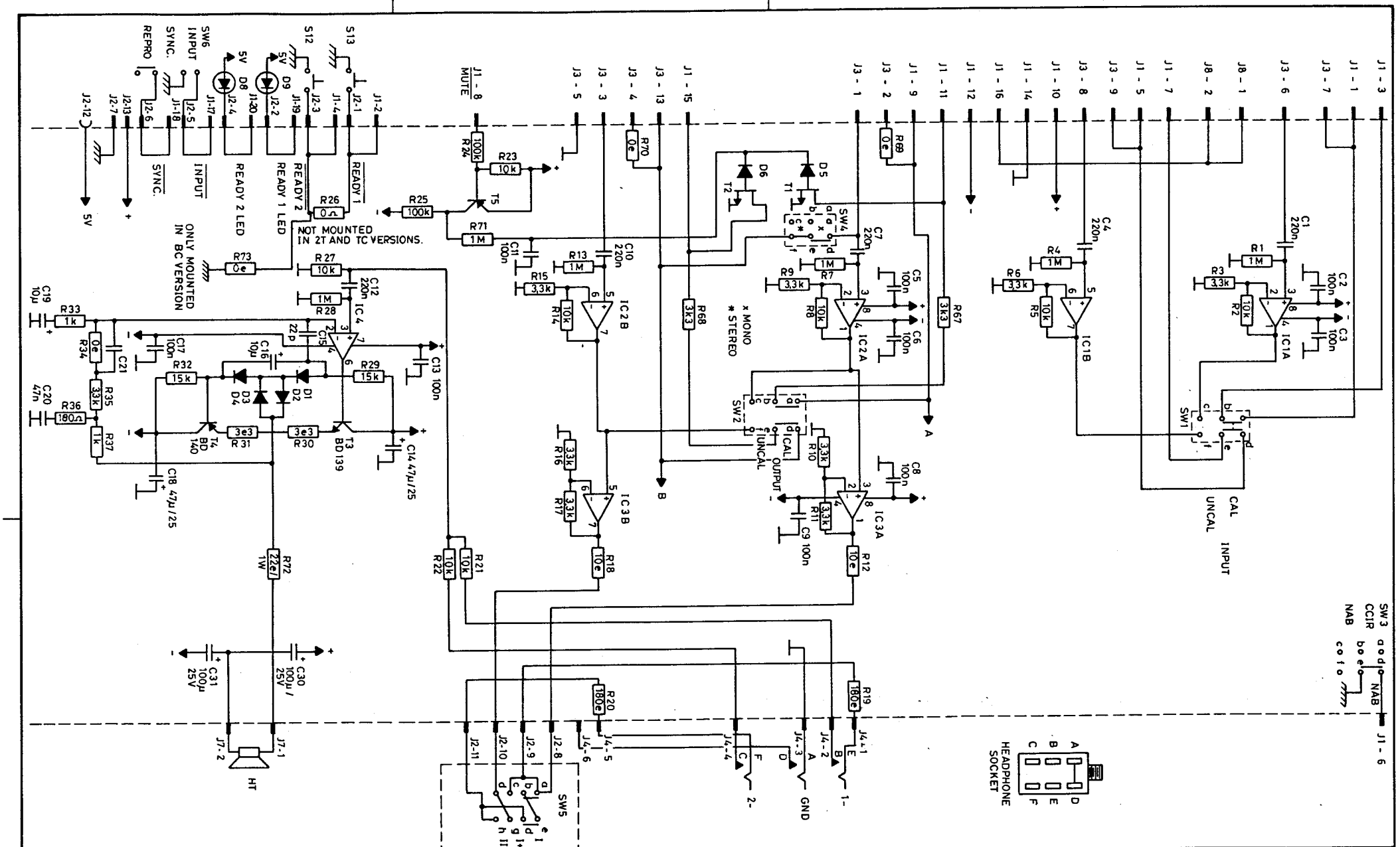

Nr.	Dato	Sign.	Ændring
2	90.09	JHE	J8-1, J8-2 Tilf.
1	90.09	JHE	C30, C31, R73 Tilf.

ANV. FRIDA

Lyrec OF DENMARK

Monitor Board audio section

Målst.	Tegn.	JHE.BS	90.02.
	Konf.		
	Godk.		
Erst.			
Mappe	2386		
	Sheet 1 of 4		

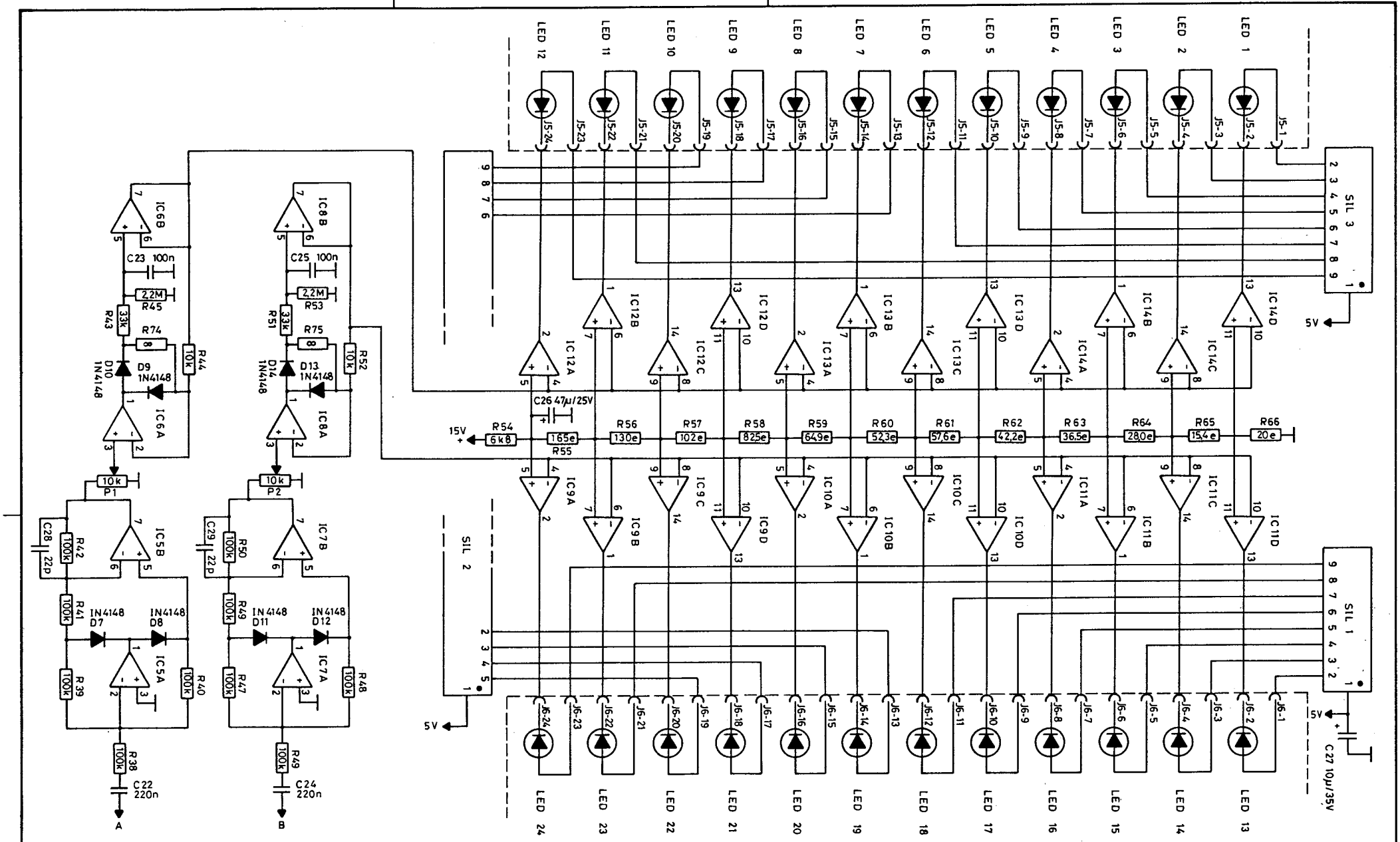

IC 1 - 8: +AT PIN 8, - AT PIN 4.

IC 9 - 14: +AT PIN 3, - PIN 12 TO DIGITAL GND (J2 - 13.)

NOTE:
THIS DIAGRAM APPLIES ONLY TO VERSIONS WIHT PEAK PROGRAMME METER.

Nr.	Dato	Sign.	Ændring
1	90.09	JHE	Tilf. R74 - R75

ANV. FRIDA

Lyrec OF DENMARK

Monitor Board
PPM section

Målst.	Tegn.	JHE. 89.90.01.26
	Konf.	
	Godk.	
Erst.		
Mappe	2386	
	Sheet 2 of 4	

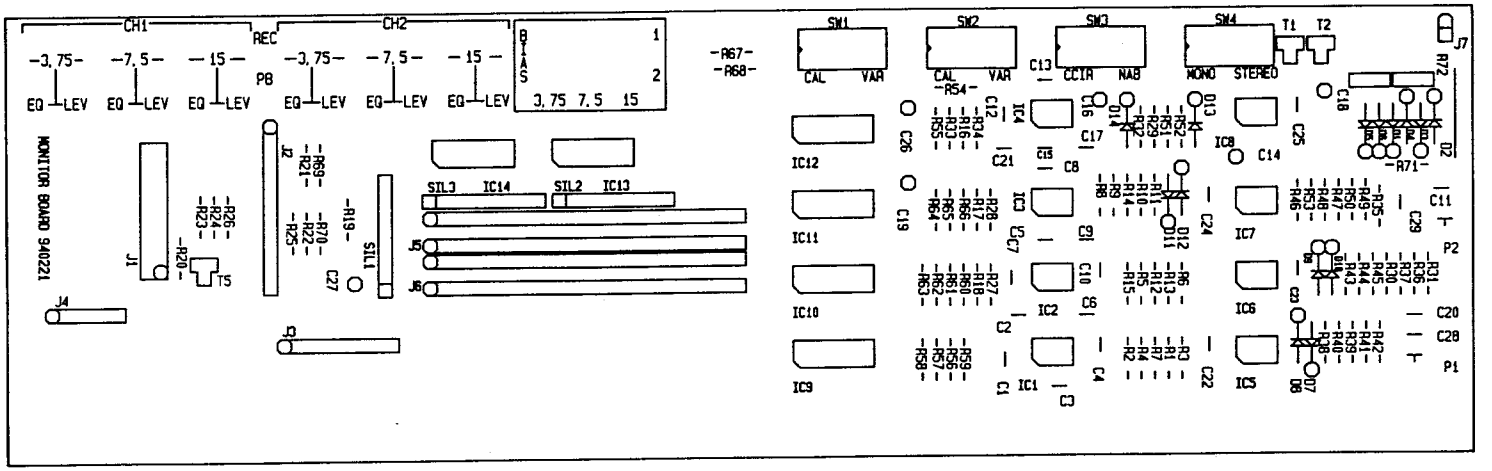

Nr.	Dato	Sign.	Ændring

ANV. FRIDA

Lyrec OF DENMARK

Monitor Board
Component layout

Målst.	Tegn.	JEH.BS	90.03.
	Konf.		
	Godk.		
Erst.			
Mappe	2386		
	Sheet 3 of 4		

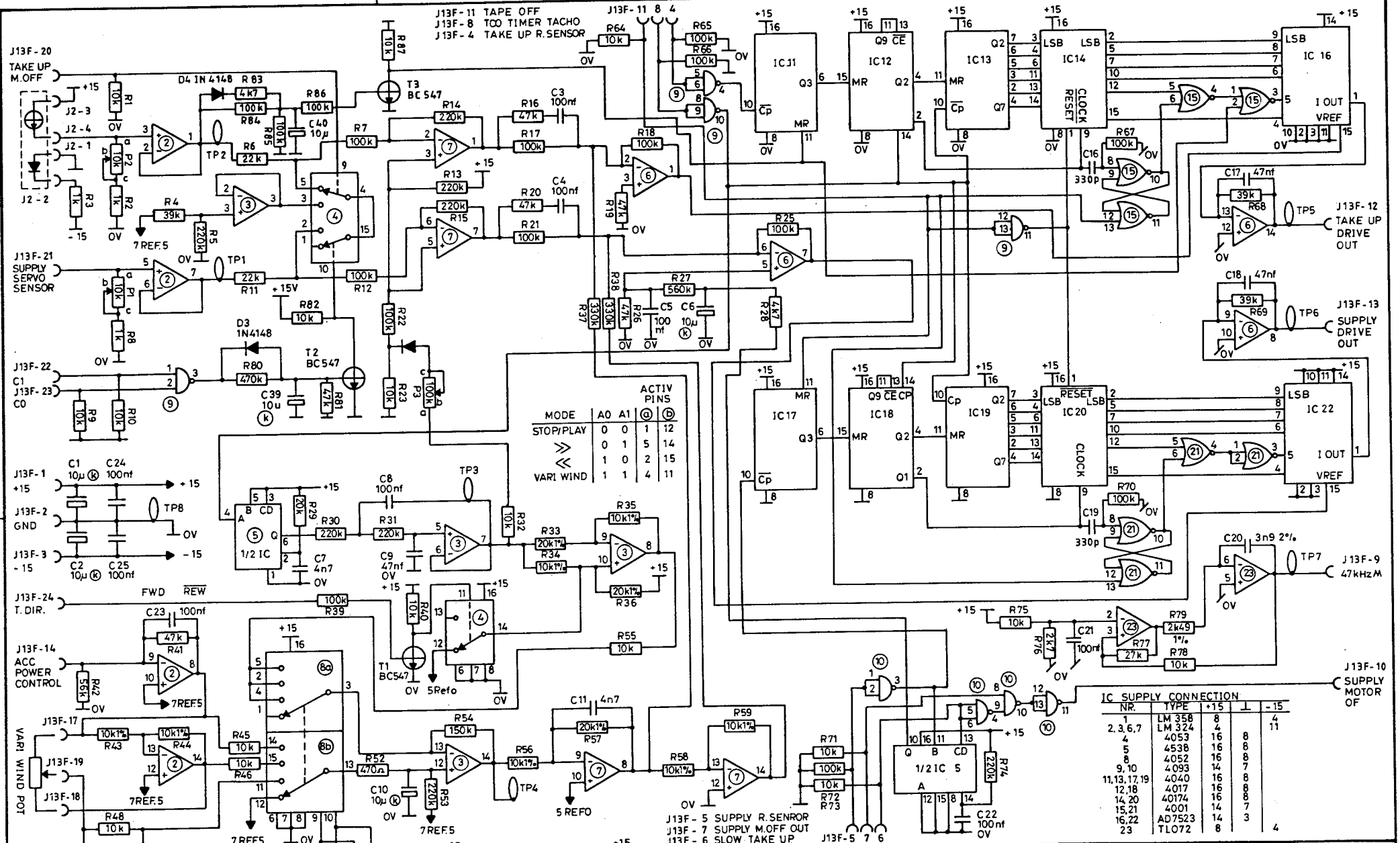
J13F-11 TAPE OFF
J13F-8 TCO TIMER TACHO
J13F-4 TAKE UP R.SENSOR
J13F-20 TAKE UP M.OFF
J13F-21 SUPPLY SERVO SENSOR
J13F-22 C1
J13F-23 C0
J13F-1 +15
J13F-2 GND
J13F-3 -15
J13F-24 T.DIR.
J13F-14 ACC POWER CONTROL
J13F-17
J13F-19
J13F-18
VARI WIND POT
J13F-16 A1
J13F-15 A0
FWD
REW
ACTIV PINS
MODE | A0 | A1 | a | b
STOP/PLAY | 0 | 0 | 1 | 12
≫ | 0 | 1 | 5 | 14
≪ | 1 | 0 | 2 | 15
VARI WIND | 1 | 1 | 4 | 11
VARI WIND SPEED LIMIT
R49 | SPEED
1k5 | 60"
4k7 | 150"
6k8 | 200"
18k | 300"
∞ | 480"
J13F-5 SUPPLY R.SENROR
J13F-7 SUPPLY M.OFF OUT
J13F-6 SLOW TAKE UP
J13F-12 TAKE UP DRIVE OUT
J13F-13 SUPPLY DRIVE OUT
J13F-9 47kHzM
J13F-10 SUPPLY MOTOR OF
IC SUPPLY CONNECTION
NR. | TYPE | +15 | ⊥ | -15
1 | LM 358 | 8 | | 4
2,3,6,7 | LM 324 | 4 | | 11
4 | 4053 | 16 | 8 |
5 | 4538 | 16 | 8 |
8 | 4052 | 16 | 8 |
9,10 | 4093 | 14 | 7 |
11,13,17,19 | 4040 | 16 | 8 |
12,18 | 4017 | 16 | 8 |
14,20 | 40174 | 16 | 8 |
15,21 | 4001 | 14 | 7 |
16,22 | AD7523 | 14 | 3 |
23 | TL072 | 8 | | 4
Nr. | Dato | Sign. | Ændring
4 | 93.04 | ReS. | C16, 19 4n7 → 330p
3 | 92.10 | ReS | NY REV. UDG.
2 | 91.05 | ReS. | NY REV. UDG.
1 | 90.05 | ReS | R81, R82 og T2 tlf.
ANV. FRIDA
Lyrec
Tape Servo Control
Målst.
Tegn. ReS/BS 89.11.02
Konf.
Godk.
Erst.
Mappe
2388
Sheet 1 of 3

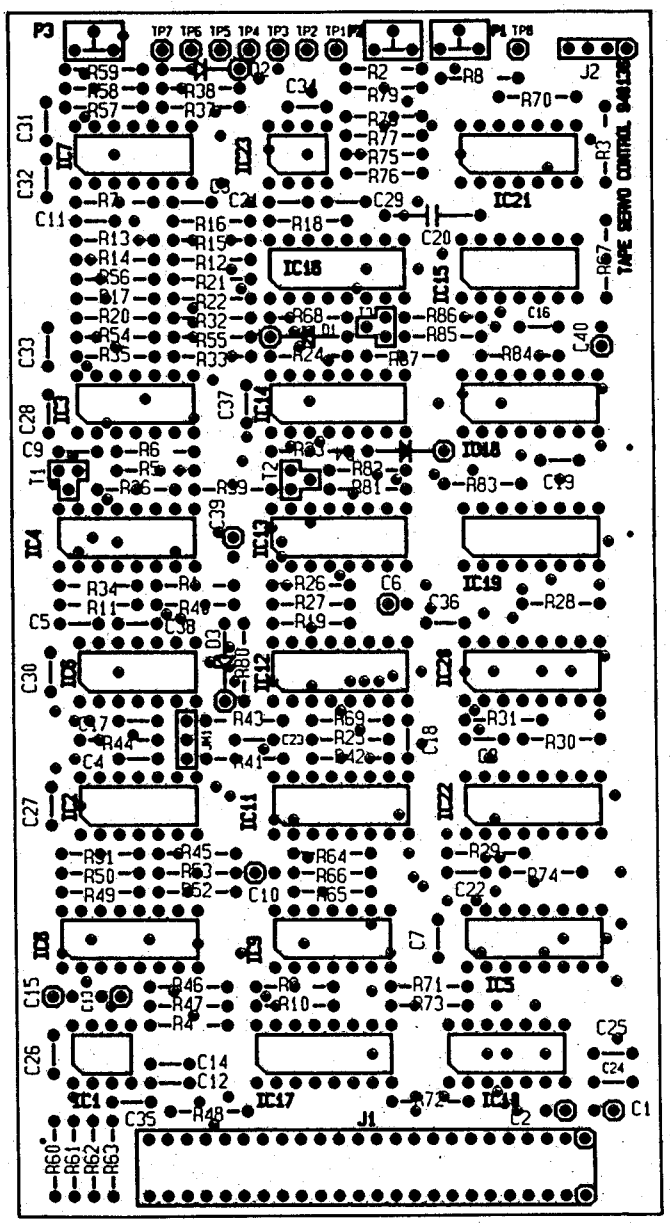

				ANV.	FRIDA			
				Lyrec		Målst.	Tegn.	ReS. BS	92.10
							Konf.		
							Godk.		
				Tape Servo Control Component layout		Erst.		
2	92.10	ReS.	NY REV. UDG. PRINT 940136			Mappe	2388	
1	90.05	ReS	PRINT ÆNDR. TIL 940135			Ersts.	Sheet 2 of 3	
Nr.	Dato	Sign.	Ændring					

R1	10K
R2	1K
R3	1K
R4	39K
R5	220K
R6	22K
R7	100K
R8	1K
R9	10K
R10	10K
R11	22K
R12	100K
R13	220K
R14	220K
R15	220K
R16	47K
R17	100K
R18	100K
R19	47K
R20	47K
R21	100K
R22	100K
R23	10K
R24	-
R25	100K
R26	47K
R27	560K
R28	4K7
R29	20K 1%
R30	220K
R31	220K
R32	10K
R33	20K 1%
R34	10K 1%
R35	10K 1%
R36	20K 1%
R37	330K
R38	330K
R39	100K
R40	10K
R41	47K
R42	56K
R43	10K 1%
R44	10K 1%
R45	10K
R46	10K
R47	2K2
R48	10K
R49	6K8
R50	10K
R51	10K
R52	470E
R53	220K
R54	150K
R55	10K
R56	10K 1%
R57	20K 1%
R58	10K 1%
R59	10K 1%
R60	10K 1%
R61	10K 1%
R62	20K 1%
R63	10K 1%
R64	10K
R65	100K
R66	100K
R67	100K
R68	39K
R69	39K
R70	100K
R71	10K
R72	100K
R73	10K
R74	220K
R75	10K
R76	2K7
R77	27K
R78	10K
R79	2K49 1%
R80	470K
R81	47K
R82	10K
R83	4K7
R84	100K
R85	100K
R86	100K
R87	10K
P1	10K
P2	10K
P3	100K
C1	10U
C2	10U
C3	100N
C4	100N
C5	100N
C6	10U
C7	4N7
C8	100N
C9	47N
C10	10U
C11	4N7
C12	100N
C13	10U
C14	100N
C15	10U
C16	330P
C17	47N
C18	47N
C19	330P
C20	3N9 1%
C21	100N
C22	100N
C23	100N
C24	100N
C25	100N
C26-38	100N
C39	10U
C40	10U
D1	1N4148
D2	1N4148
D3	1N4148
T1	BC547
T2	BC547
T3	BC547
J13F	20P G09
J2	4P BERG
IC1	LM358
IC2	LM324
IC3	LM324
IC4	4053
IC5	4538
IC6	LM324
IC7	LM324
IC8	4052
IC9	4093
IC10	4093
IC11	4040
IC12	4017
IC13	4040
IC14	40174
IC15	4001
IC16	AD7523
IC17	4040
IC18	4017
IC19	4040
IC20	40174
IC21	4001
IC22	AD7523
IC23	TL072

NR.	DATO	SIGN.	AENDRING
1	9304	ReS	C16,19 - 330P

ANV.	FRIDA		2388C0
LYREC OF DENMARK	MALST.	TEGN.	ReS 9210
		KONF.	
		GODK.	
TAPE SERVO CONTROL	ERST.		
	MAPPE	2388	
	ERSTS.	SHEET 3 OF 3	

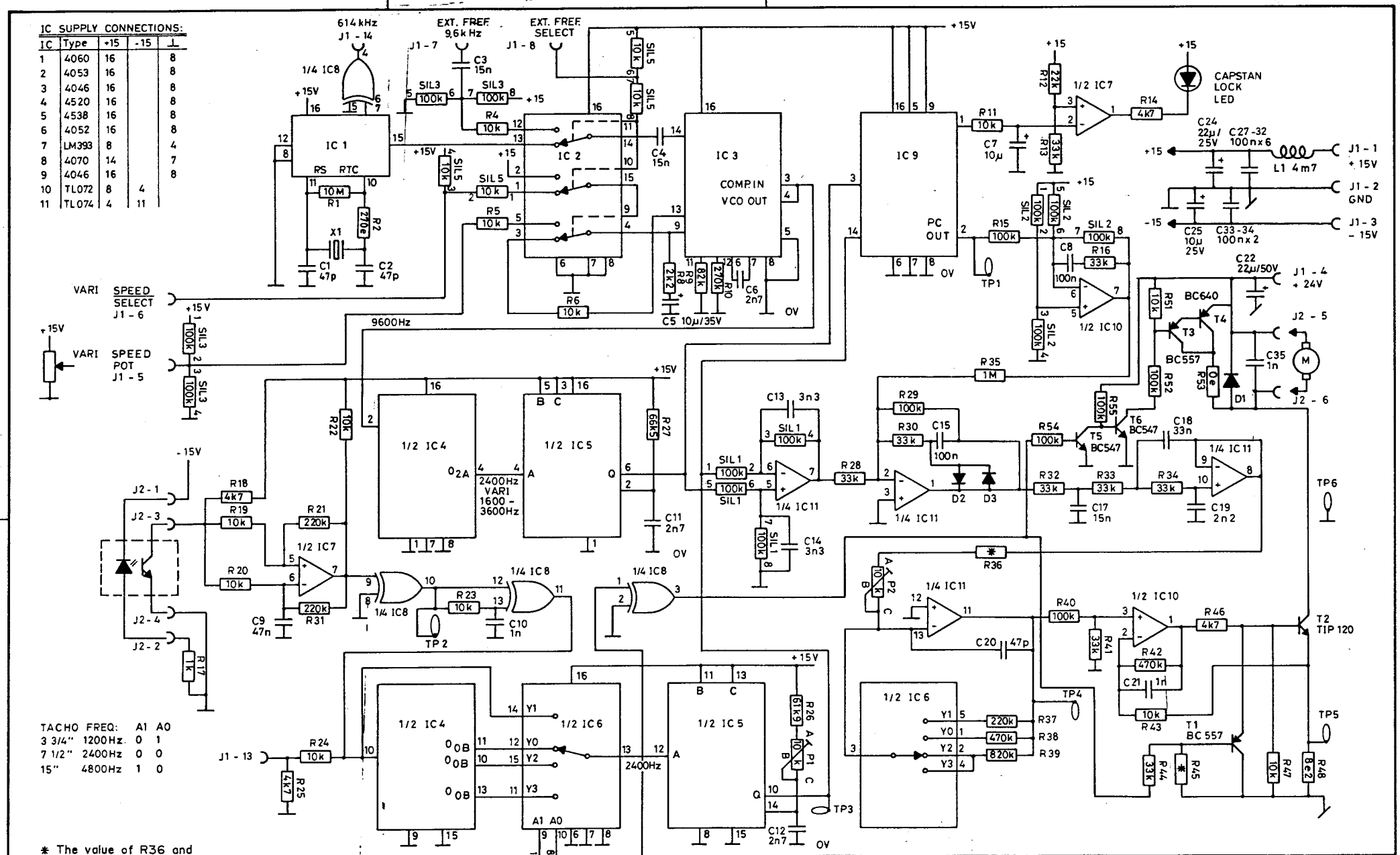
IC SUPPLY CONNECTIONS:
IC Type +15 -15 ⊥
1 4060 16 8
2 4053 16 8
3 4046 16 8
4 4520 16 8
5 4538 16 8
6 4052 16 8
7 LM393 8 4
8 4070 14 7
9 4046 16 8
10 TL072 8 4
11 TL074 4 11
614 kHz
J1 - 14
1/4 IC8
EXT. FREF. 9,6 kHz
J1 - 7
EXT. FREF. SELECT
J1 - 8
+15V
IC 1
RS RTC
IC 2
IC 3
COMP.IN
VCO OUT
IC 9
PC OUT
1/2 IC7
1/2 IC10
CAPSTAN LOCK LED
J1 - 1 +15V
J1 - 2 GND
J1 - 3 -15V
J1 - 4 +24V
J2 - 5
J2 - 6
VARI SPEED SELECT J1 - 6
VARI SPEED POT J1 - 5
9600Hz
1/2 IC4
1/2 IC5
2400Hz VARI 1600 - 3600Hz
1/4 IC11
1/4 IC8
1/2 IC6
BC640
BC557
BC547
T2 TIP 120
T1 BC 557
TP1
TP2
TP3
TP4
TP5
TP6
J2 - 1
J2 - 2
J2 - 3
J2 - 4
J1 - 13
TACHO FREQ: A1 A0
3 3/4" 1200Hz 0 1
7 1/2" 2400Hz 0 0
15" 4800Hz 1 0
* The value of R36 and R45 depends on the motor type used in the capstan drive:
Motor type R36 R45
Minimotor 4k7 10k
Escap 8k2 8k2
= POWER GND, FØRES SEPARAT TIL J1 - 2.
J1 - 9 A1
J1 - 10 A0
SPEED SELECT
CAPSTAN ON J1 - 11
ANV. FRIDA
Lyrec OF DENMARK
Capstan Servo
Målst.
Tegn. JHE/BS 89.09.15
Konf.
Godk.
Erst.
Mappe 2389
Sheet 1 of 3
Nr. Dato Sign. Ændring
4 92.11 JHE C1 10p → 47p, R2 1k → 270e
3 91.04 JHE 614 kHz tilf.
2 90.10 JHE * Tilf. C36 fj.
1 90.09 JHE Tilf. C36, R54, R55, T5, T6, L1

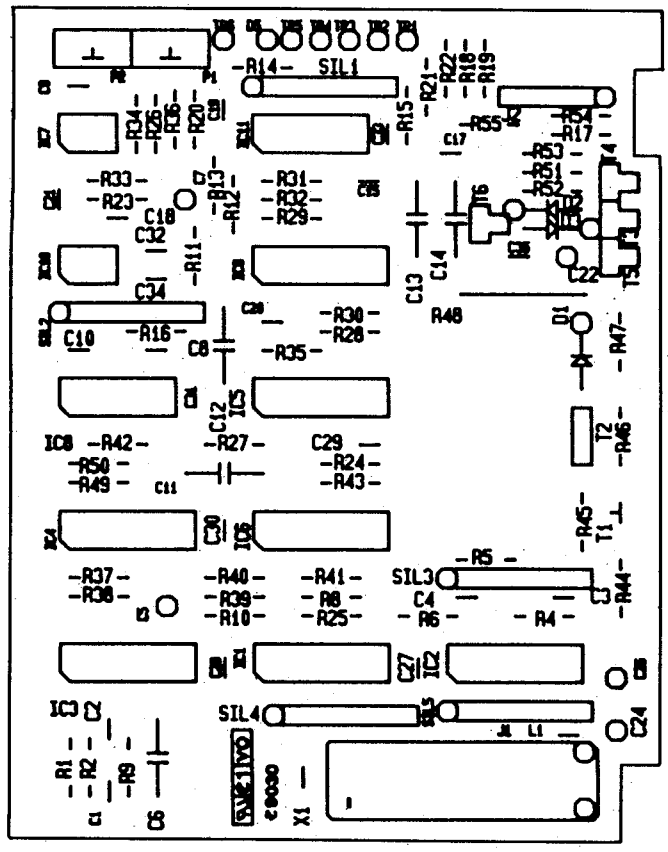

				ANV.	FRIDA			
				Lyrec OF DENMARK		Målst.	Tegn.	JHE.BS 90.09.
							Konf.	
							Godk.	
				Capstan Servo Component layout		Erst.		
						Mappe	2389	
1	90.09	JHE	Rev. udg. 940126			Ersts.	Sheet 2 of 3	
Nr.	Dato	Sign.	Ændring					

COMPONENT LIST

R1	10M	R45	NOTE	C1	47P	D1	1N4001	IC1	4060
R2	270E	R46	4K7	C2	47P	D2	1N4148	IC2	4053
R4	10K	R47	10K	C3	15N	D3	1N4148	IC3	4046
R5	10K	R48	8E2 5W	C4	15N			IC4	4520
R6	10K	R49	100K	C5	10U/35			IC5	4538
R8	2K2	R50	100K	C6	2N7 1%	TI	BC557	IC6	4052
R9	82K	R51	10K	C7	10U/35	T2	TIP120	IC7	LM393
R10	270K	R52	100K	C8	100N	T3	BC557	IC8	4070
R11	10K	R53	0E	C9	47N	T4	BC640	IC9	4046
R12	22K	R54	100K	C10	1N	T5	BC547	IC10	TL072
R13	33K	R55	100K	C11	2N7 1%	T6	BC547	IC11	TL074
R14	4K7			C12	2N7 1%				
R15	100K			C13	3N3 1%				
R16	33K	SIL1	4*100K	C14	3N3 1%				
R17	1K	SIL2	4*100K	C15	100N				
R18	4K7	SIL3	4*100K	C17	15N				
R19	10K	SIL4	4*100K	C18	33N				
R20	10K	SIL5	4*10K	C19	2N2				
R21	220K			C20	47P				
R22	10K			C21	1N				
R23	10K	P1	10K	C22	22U/50V				
R24	10K	P2	10K	C24	22U/50V				
R25	4K7			C25	10U/35V				
R26	61K9 1%			C27	100N				
R27	66K5 1%			C28	100N				
R28	33K			C29	100N				
R29	100K			C30	100N				
R30	33K			C31	100N				
R32	33K			C32	100N				
R33	33K			C33	100N				
R34	33K			C34	100N				
R35	1M			C35	1N				
R36	NOTE								
R37	220K								
R38	470K			L1	4.7mH				
R39	820K								
R40	100K								
R41	33K			X1	9.8000MHZ XTAL				
R42	470K								
R43	10K								
R44	33K								

NOTE: VALUES OF R36 AND R45 DEPEND ON MOTOR TYPE ACCORDING TO TABLE:

	R36	R45
MINIMOTOR:	4K7	10K
ESCAP:	8K2	8K2

940126	REV. 4	REV. 1	REV. 4
PCB	SHEET 1	SHEET 2	SHEET 3
MATCHING CONFIGURATIONS			

NR.	DATO	SIGN.	ÆNDRING
4	9211	JHE	X1,C1,R2 CHANGED
3	9208	JHE	COMP.LIST ADDED

ANV. FRIDA 2389C4

LYREC OF DENMARK

CAPSTAN SERVO

MALST.	TEGN.	JHE	9208
	KONF.		
	GODK.		
ERST.			
MAPPE	2389		
ERSTS.	SHEET 3 OF 3		

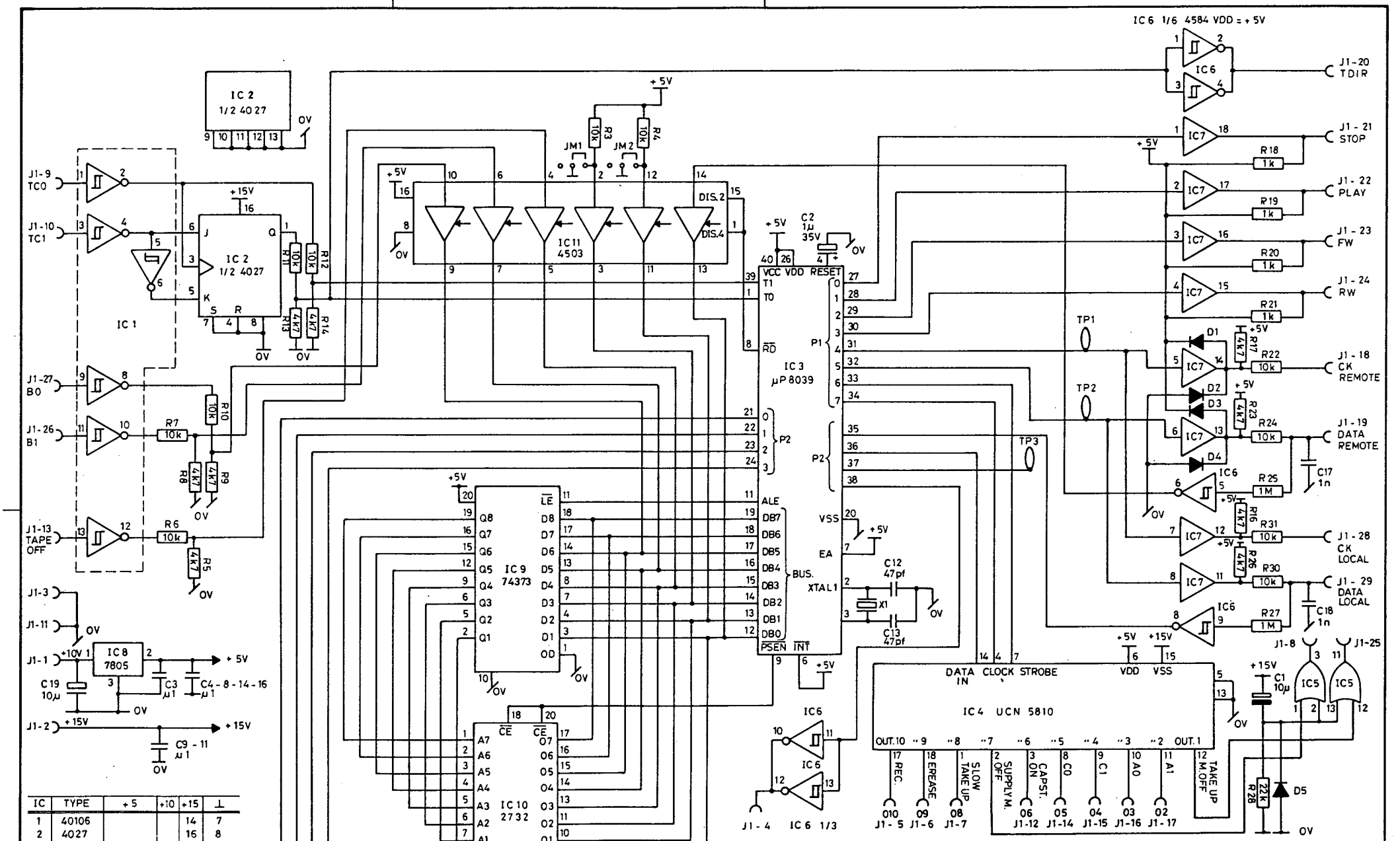

IC	TYPE	+5	+10	+15	⊥
1	40106			14	7
2	4027			16	8
3	8039	26,40,5,7			20
4	5810	6		15	5,13
5	4071	–		14	7
6	40106	14			7
7	2595	9			10
8	7805	2	1		3
9	74373	20			1,10
10	2732A	24			12
11	4503	16			8

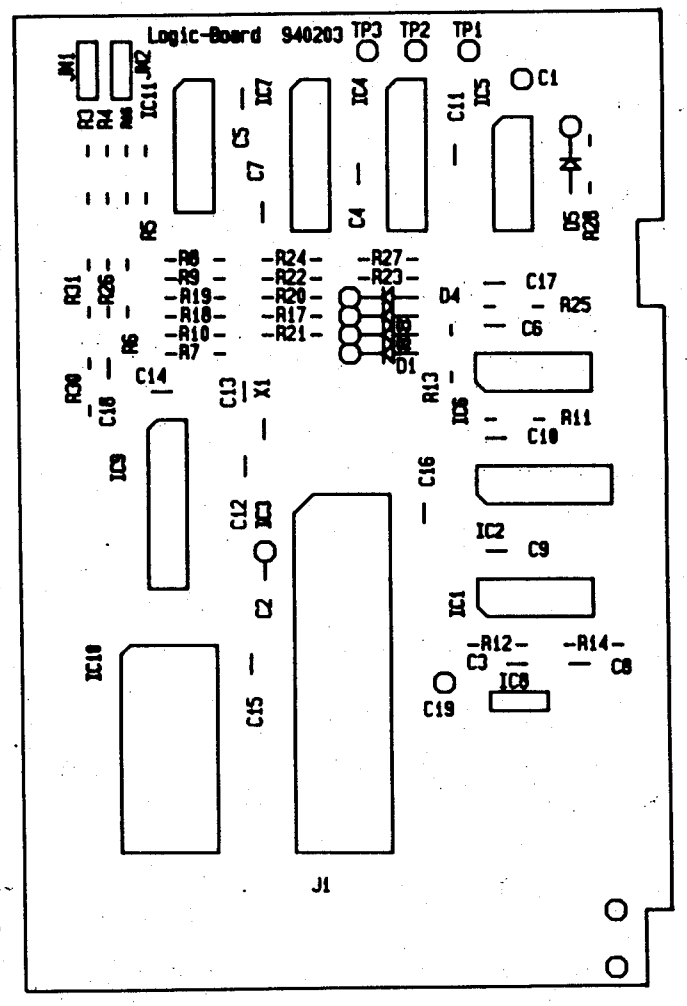

				ANV.	FRIDA			
				Lyrec OF DENMARK		Målst.	Tegn.	RES.BS.90.08
							Konf.	
							Godk.	
				Logic Board Component layout		Erst.		
						Mappe	2390	
1	90.08	RaS	Rev. udg. 940203					
Nr.	Dato	Sign.	Ændring			Ersts.	Sheet 2 of 3	

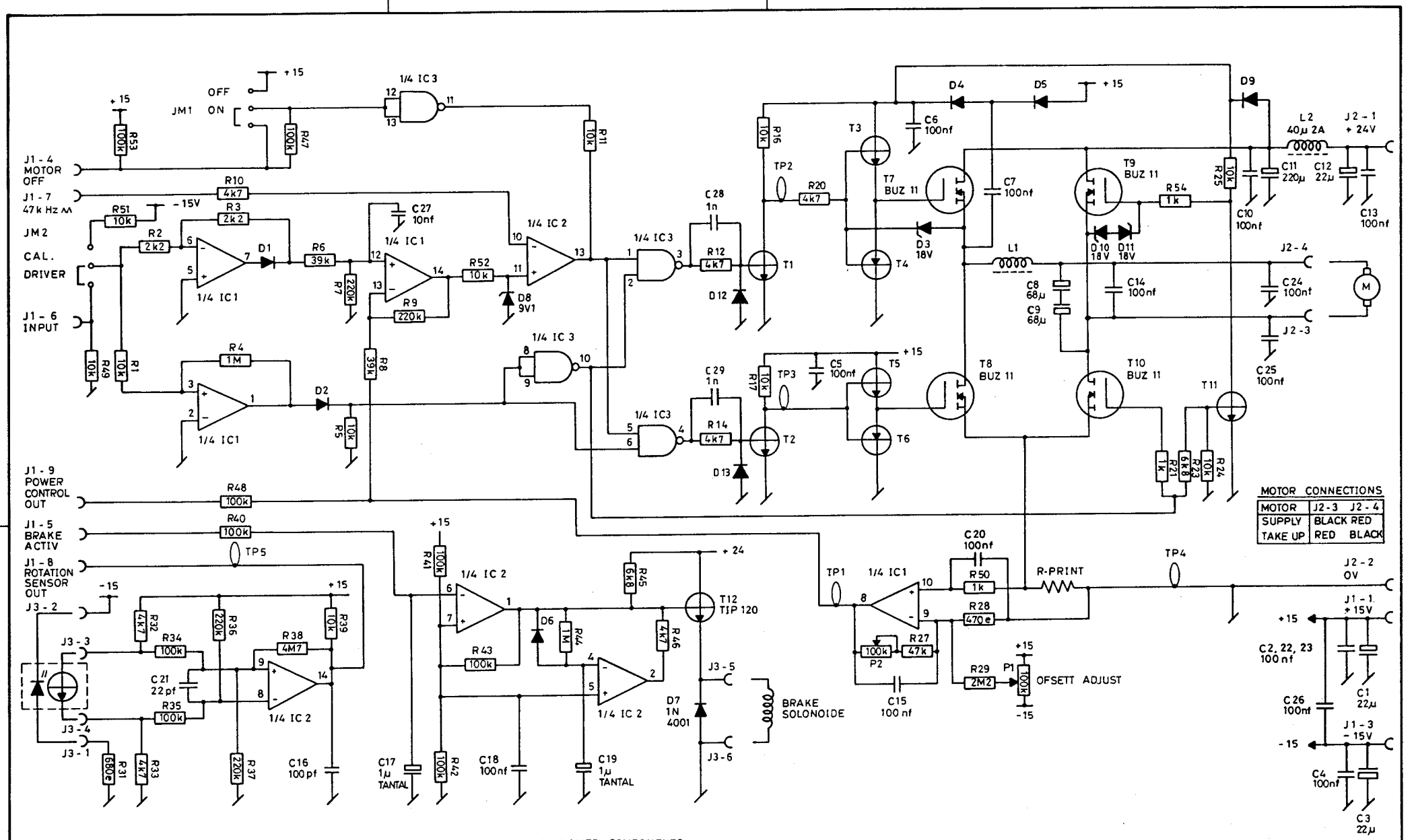

MOTOR CONNECTIONS

MOTOR	J2-3	J2-4
SUPPLY	BLACK	RED
TAKE UP	RED	BLACK

IC SUPPLY CONNECTIONS

IC	TYPE	+15	-15	⊥
1	LM 324	4	11	
2	LM 339	3		12
3	4093	14		7

UNNAMED COMPONENTS

TRANSISTORS: Npn BC 547
—— " —— Pnp BC 557

DIODES: 1N 4148

Nr.	Dato	Sign.	Ændring
5	92.03	JHE	NY REV. UDG.
4	91.08	ReS	C 27 TILF.
3	91.06.	JHE.	D9 TILF.
2	91.03	ReS.	NY REV. UDG.
1	90.08	ReS	R51 - JM2 TILF.

ANV. FRIDA

Lyrec OF DENMARK

Motor Power Amp.

Målst.	Tegn.	ReS/BS 89.10.25
	Konf.	
	Godk.	
Erst.		
Mappe	2391	
	Sheet 1 of 3	

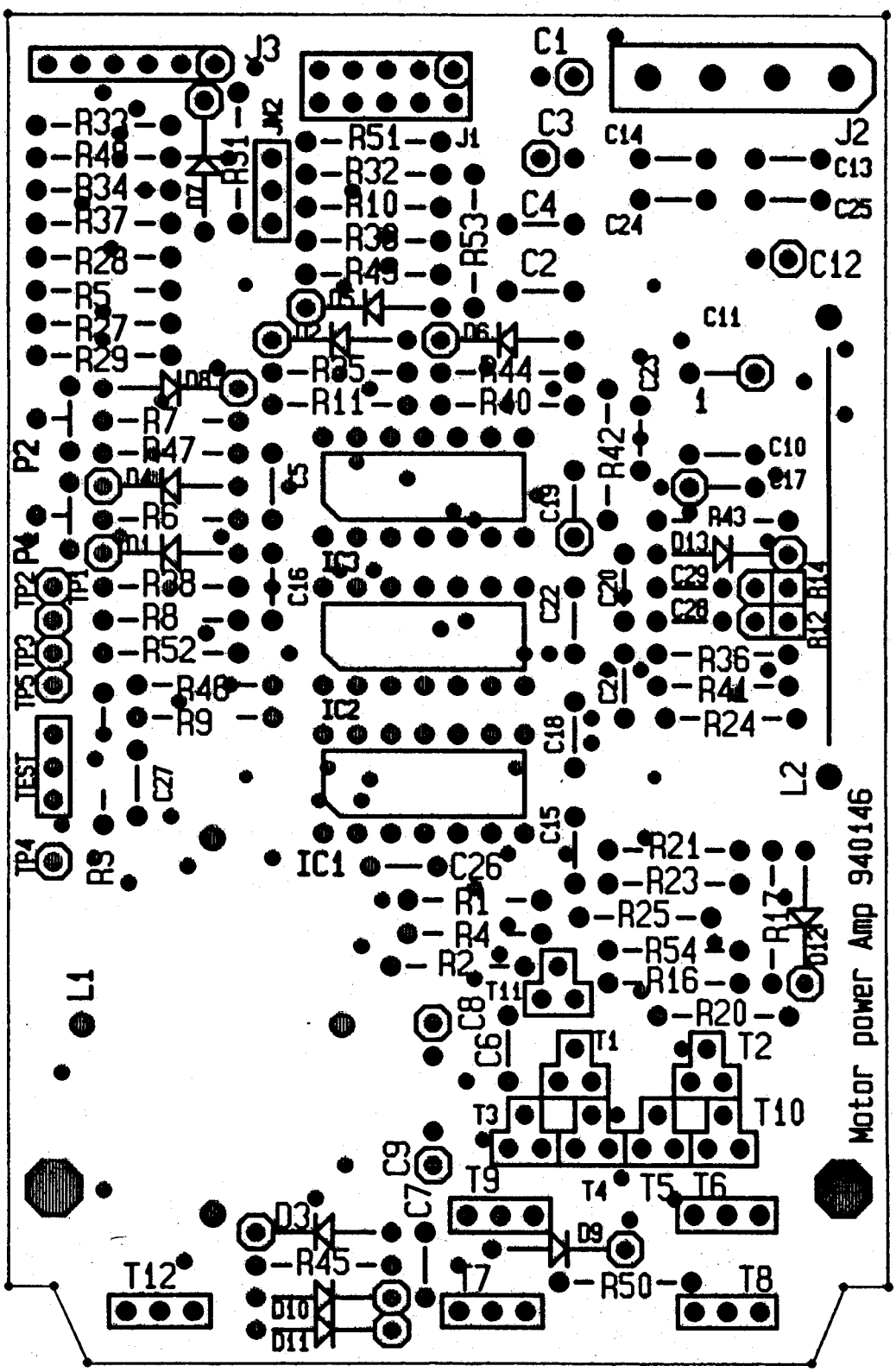

				ANV.	FRIDA			
				Lyrec OF DENMARK		Målst.	Tegn.	JHE.BS 92.11.
							Konf.	
							Godk.	
				Motor Power Amp. Component layout		Erst.		
						Mappe	2391	
6	92.11	JHE	NY REV. UDG. 940146			Ersts.	SHEET 2 OF 3	
Nr.	Dato	Sign.	Ændring					

COMPONENT LIST

R1	10K	R43	100K	C1	22U/40V	D1	1N4148	IC1	LM324
R2	2K2	R44	1M	C2	100N	D2	1N4148	IC2	LM339
R3	2K2	R45	6K8	C3	22U/40V	D3	BZX79 18V	IC3	4093
R4	1M	R46	4K7	C4	100N	D4	1N4148		
R5	10K	R47	100K	C5	100N	D5	1N4148		
R6	39K	R48	100K	C6	100N	D6	1N4148		
R7	220K	R49	10K	C7	100N	D7	1N4001		
R8	39K	R50	1K	C8	68U/40V	D8	BZX79 9V1		
R9	220K	R51	10K	C9	68U/40V	D9	1N4148		
R10	4K7	R52	10K	C10	100N	D10	BZX79 18V		
R11	10K	R53	100K	C11	220U/40V	D11	BZX79 18V		
R12	4K7	R54	1K	C12	22U/40V	D12	1N4148		
R14	4K7			C13	100N	D13	1N4148		
R16	10K	P1	100K	C14	100N				
R17	10K	P2	100K	C15	100N	T1	BC547		
R20	4K7			C16	100P	T2	BC547		
R21	1K	L1	LYREC PART NO. 822540	C17	1U/35V	T3	BC547		
R23	6K8			C18	100N	T4	BC557		
R24	10K	L2	40UH/2A	C19	1U/35V	T5	BC547		
R25	10K			C20	100N	T6	BC557		
R27	47K			C21	22P	T7	BUZ11		
R28	470E			C22	100N	T8	BUZ11		
R29	2M2			C23	100N	T9	BUZ11		
R31	680E			C24	100N	T10	BUZ11		
R32	4K7			C25	100N	T11	BC547		
R33	4K7			C26	100N	T12	TIP120		
R34	100K			C27	10N				
R35	100K			C28	1N				
R36	220K			C29	1N				
R37	220K								
R38	4M7								
R39	10K								
R40	100K								
R41	100K								
R42	100K								

940146	REV.5	REV.6	REV.7
940146	REV.5	REV.6	REV.6
PCB	SHEET 1	SHEET 2	SHEET 3
MATCHING CONFIGURATIONS			

				ANV.	FRIDA	2391C7		
				LYREC OF DENMARK	* MALST.	TEGN.	JHE	9211
						KONF.		
						GODK.		
				MOTOR POWER AMP	EAST.			
7	9211	JHE	R8,R9 VALUES CORRECTED		MAPPE	2391		
6	9211	JHE	COMP. LIST ADDED					
NR.	DATO	SIGN.	AENDRING		EASTS.	SHEET 3 OF 3		

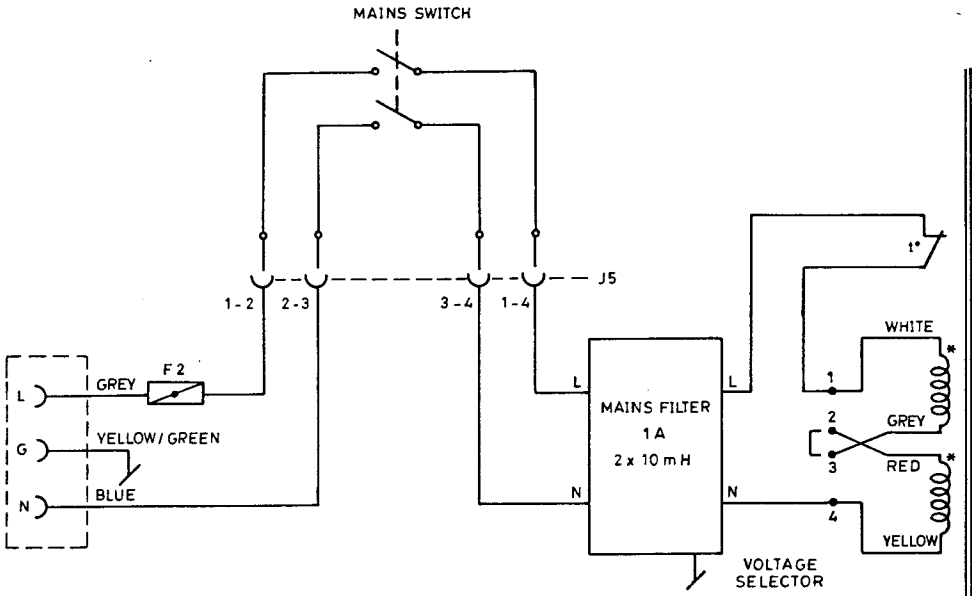

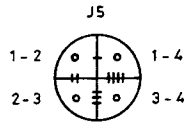

	VOLTAGE SELECTOR CONNECTIONS	MAINS FUSE F2
120V	1-2, 3-4	1,25A (T)
240V	2-3	630mA (T)

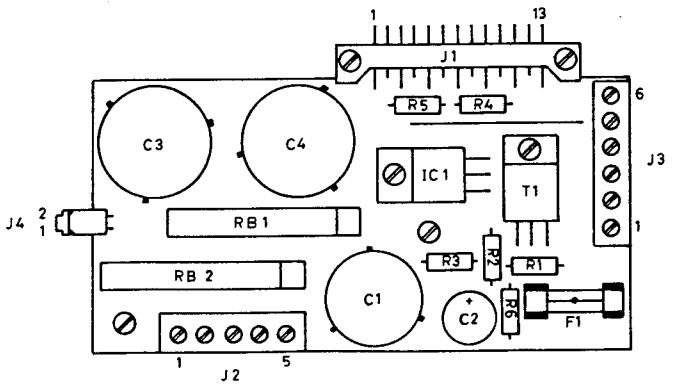

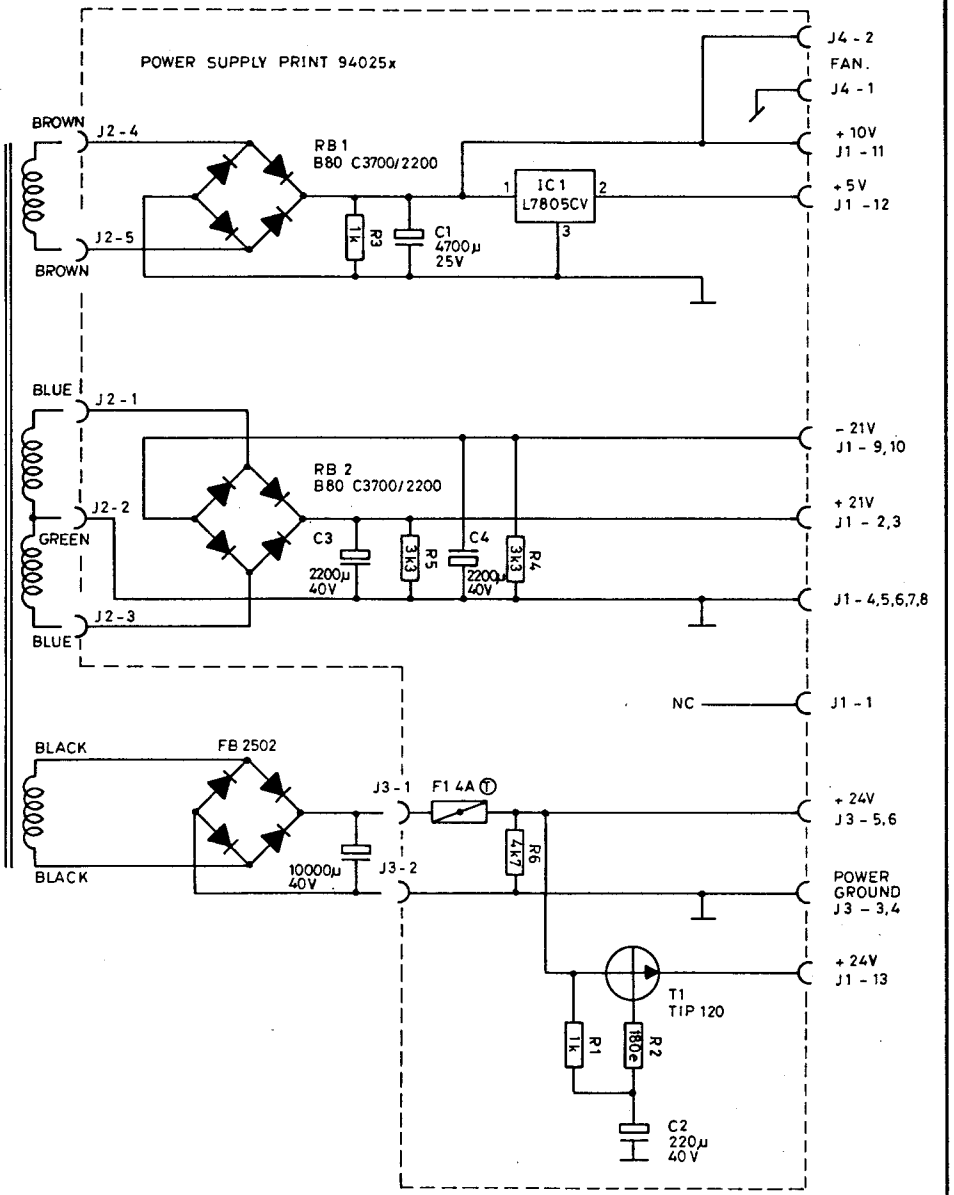

Nr.	Dato	Sign.	Ændring

ANV. FRIDA

Lyrec OF DENMARK

Power supply

Målst.	Tegn.	ReS/BS	89.06.15
	Konf.		
	Godk.		
Erst.			
Mappe	2392		
	Sheet 1 of 2		

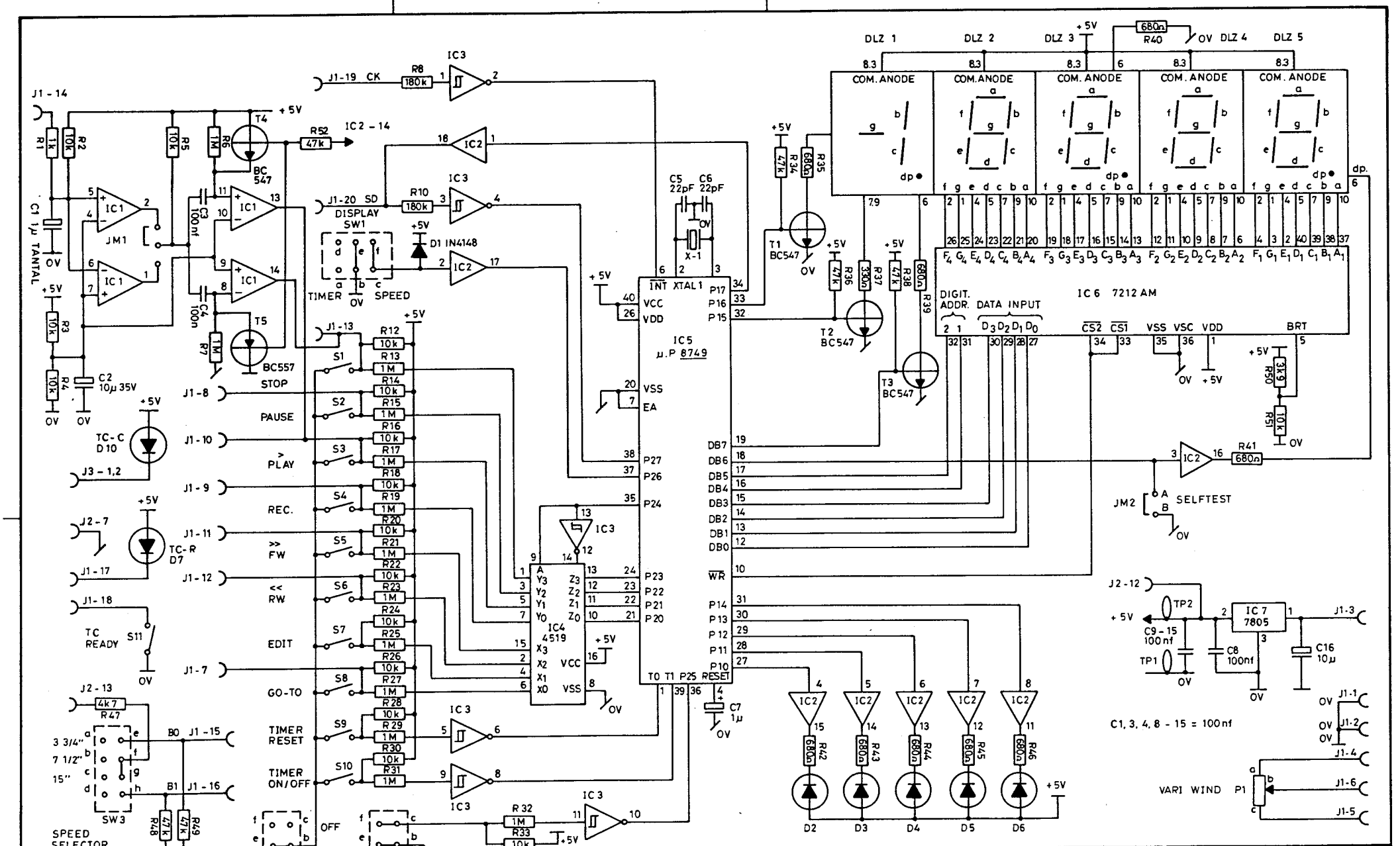

NOTE:
MONITOR SW (SW6) AND TRACK SELECTOR (SW5) SEE DIAGRAM 2386.

IC	TYPE	+ 5	+ 10	⊥
1	LM 339	3		12
2	UDN 2595	9		10
3	4584	14		7
4	4519	16		8
5	8749	26,40		7,20
6	7212	1		35,36
7	7805	2	1	3

Nr.	Dato	Sign.	Ændring
2	91.08	ReS.	C1 ændr. til 1µ
1	90.08	ReS.	T4 - T5 - D10 TILF.

ANV. FRIDA

Lyrec OF DENMARK

Front Panel Board

Målst.	Tegn.	ReS/BS 89.06.15
	Konf.	
	Godk.	
Erst.		
Mappe	2393	
	Sheet 1 of 3	

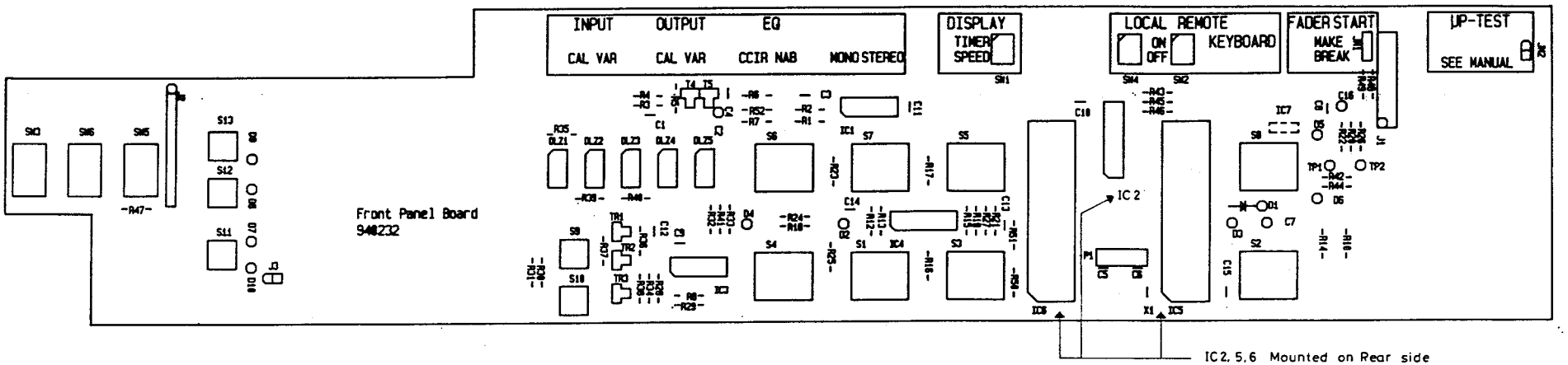

Nr.	Dato	Sign.	Ændring
2	91.04	ReS	IC 2,5,6 Mounted on Rear side tilf.
1	90.08	ReS.	Rev. udg.940232

ANV. FRIDA

Lyrec OF DENMARK

Front Panel Board

Målst.	Tegn.	ReS.BS	90.08
	Konf.		
	Godk.		
Erst.			
Mappe	2393		
Ersts.	Sheet 2 of 3		

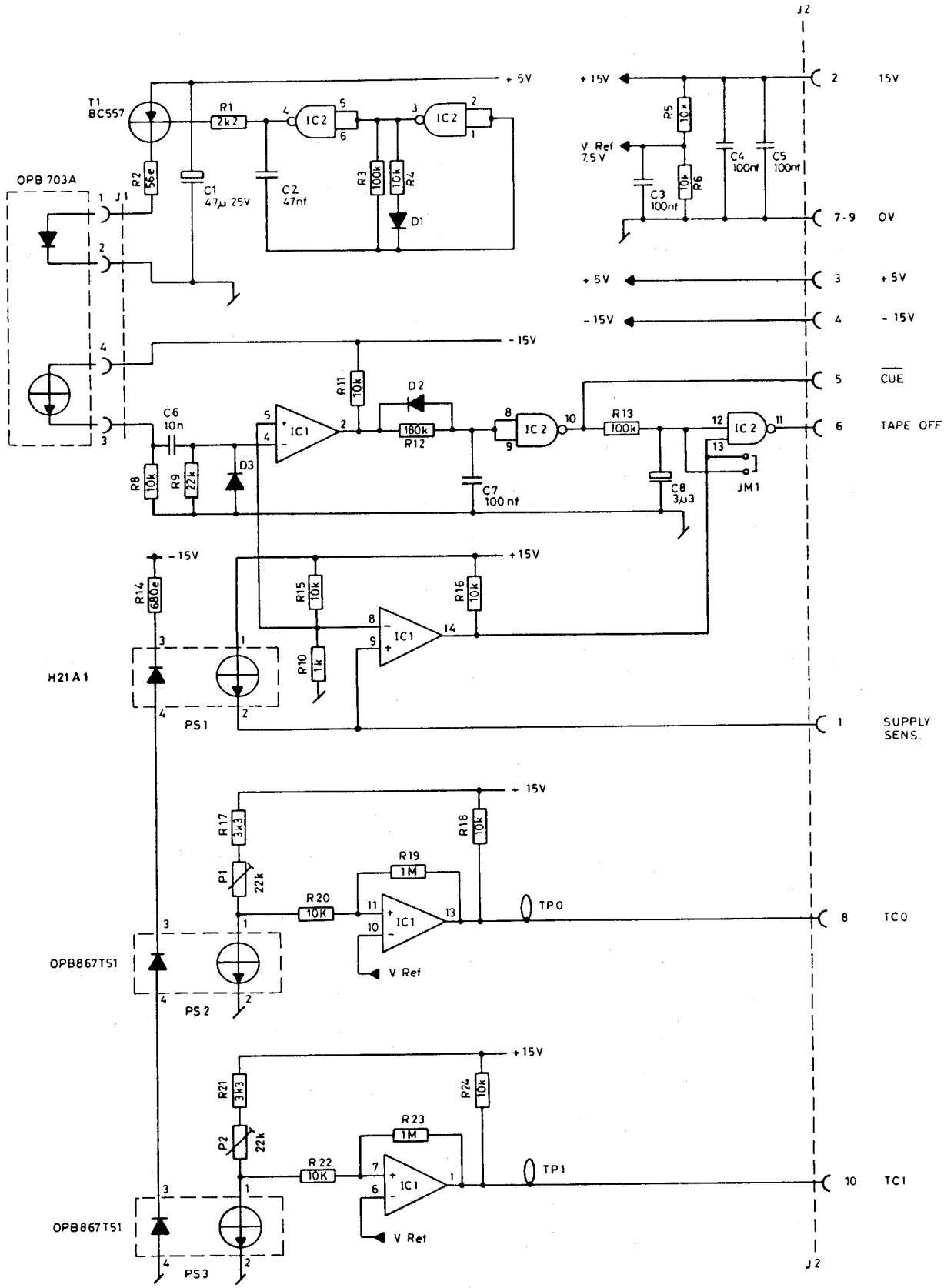

D1 - D3 1N4148

IC SUPPLY CONNECTIONS

IC	TYPE	+15	
1	LM 339	3	12
2	4093	14	7

Nr.	Dato	Sign.	Ændring
2	91 01	ReS	P1-2 10k → 22k, JM1 indf.
1	89 09	ReS	DIV. ÆNDR

ANV. FRIDA

Lyrec OF DENMARK

Tape timer
Logic sensor

Målst.

Tegn. ReS/BS 890615

Konf.

Godk.

Erst.

Mappe

2395

Sheet 1 of 3

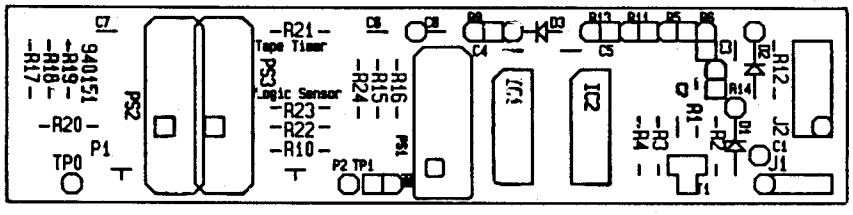

				ANV.	FRIDA			
				Lyrec		Målst.	Tegn.	ReS.BS 90.03
							Konf.	
							Godk.	
				Tape Timer Logic Sensor Component layout		Erst.		
						Mappe	2395	
Nr.	Dato	Sign.	Ændring				Sheet 2 of 3	

R1	2K2	C1	47U	D1	1N4148	IC1	LM339
R2	56E	C2	47N	D2	1N4148	IC2	4093
R3	100K	C3	100N	D3	1N4148		
R4	10K	C4	100N				
R5	10K	C5	100N				
R6	10K	C6	10N				
R7	-	C7	100N	T1	BC557	J1	4P BERG
R8	10K	C8	3U3			J2	10P IDC
R9	22K						
R10	1K						
R11	10K			PS1	H21A1		
R12	180K			PS2	OPB867T51		
R13	100K			PS3	OPB867T51		
R14	680E						
R15	10K						
R16	10K						
R17	3K3						
R18	10K						
R19	1M						
R20	10K						
R21	3K3						
R22	10K						
R23	1M						
R24	10K						

NR.	DATO	SIGN.	AENDRING	ANV.	FRIDA		2395C0	
				LYREC OF DENMARK		MALST.	TEGN. RaS	9210
							KONF.	
							GODK.	
				TAPE TIMER LOGIC SENSOR		ERST.		
						MAPPE	2395	
						ERSTS.	SHEET 3 OF 3	

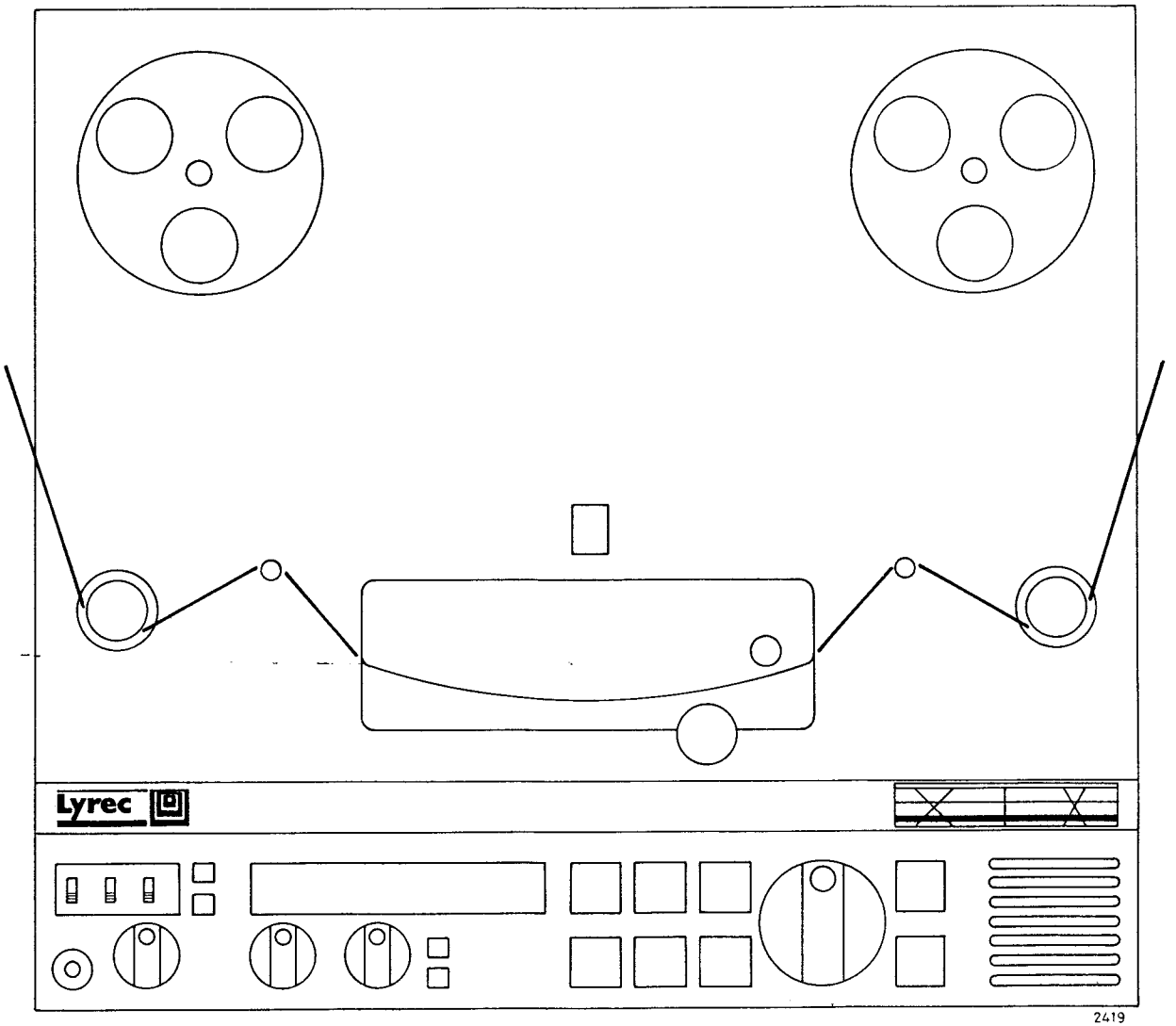

				ANV.	FRIDA			
				Lyrec		Målst.	Tegn.	KS/BS 89.07.17
							Konf.	
							Godk.	
				Tapepath normal		Erst.		
						Mappe	2419	
Nr.	Dato	Sign.	Ændring			Ersts.		

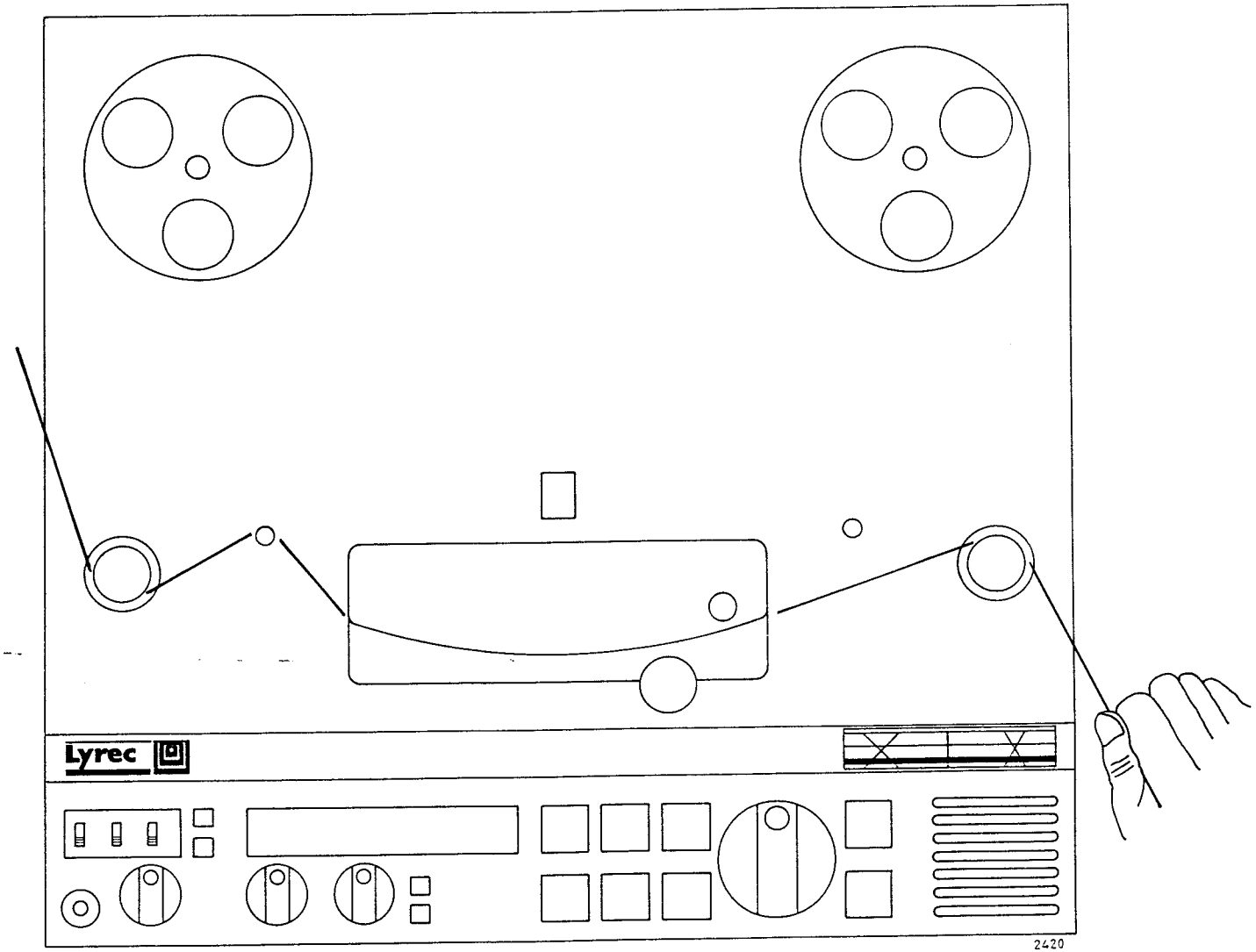

Nr.	Dato	Sign	Ændring

ANV. FRIDA

Lyrec

Tapepath editing

Målst.	Tegn.	KS/BS 89.0717
	Konf.	
	Godk.	
Erst.		
Mappe	2420	
Ersts.		

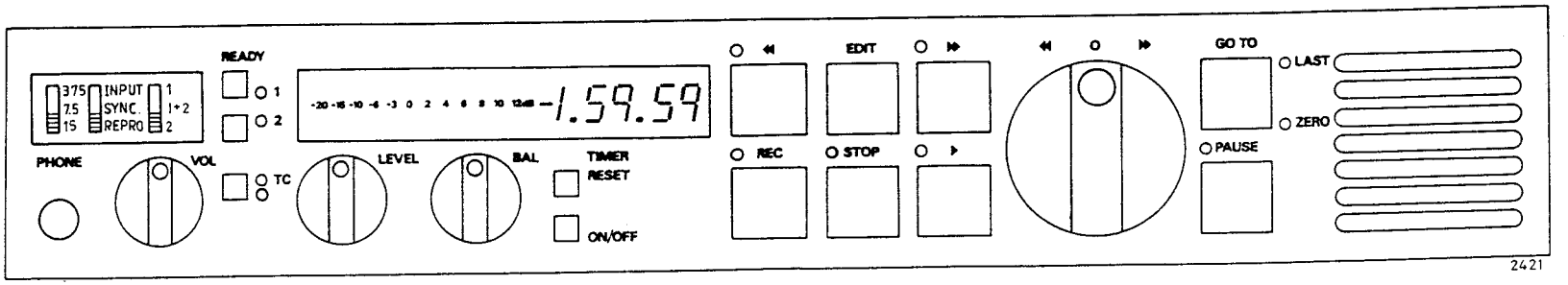

				ANV.	FRIDA			
				Lyrec		Målst.	Tegn.	KS/BS 89.07.25
							Kont.	
							Godk.	
				Operation panel TC		Erst.		
						Mappe	2421	
1	93 01	KS	4 LED TILF.			Ersts.		
Nr	Dato	Sign.	Ændring					

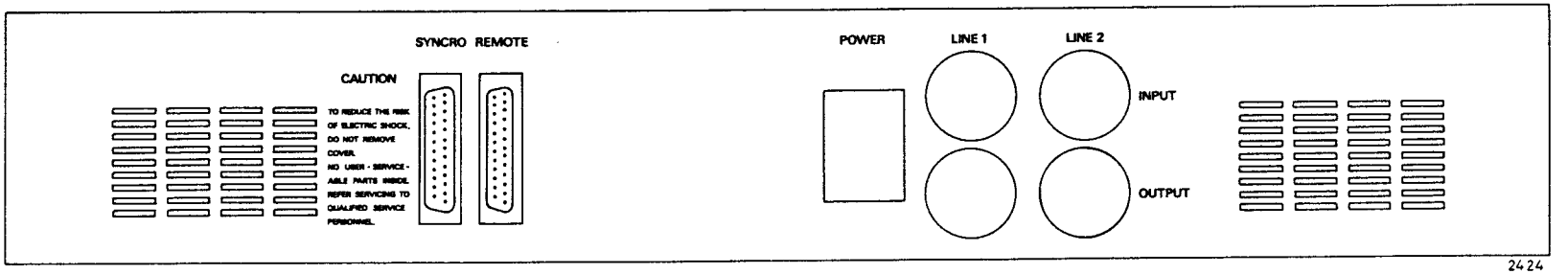

2424

Nr.	Dato	Sign.	Ændring

ANV. FRIDA

Lyrec OF DENMARK

Rear Panel

Målst.	Tegn.	KS/BS	89 07 25
	Konf.		
	Godk.		
Erst.			
Mappe	2424		
Ersts.			

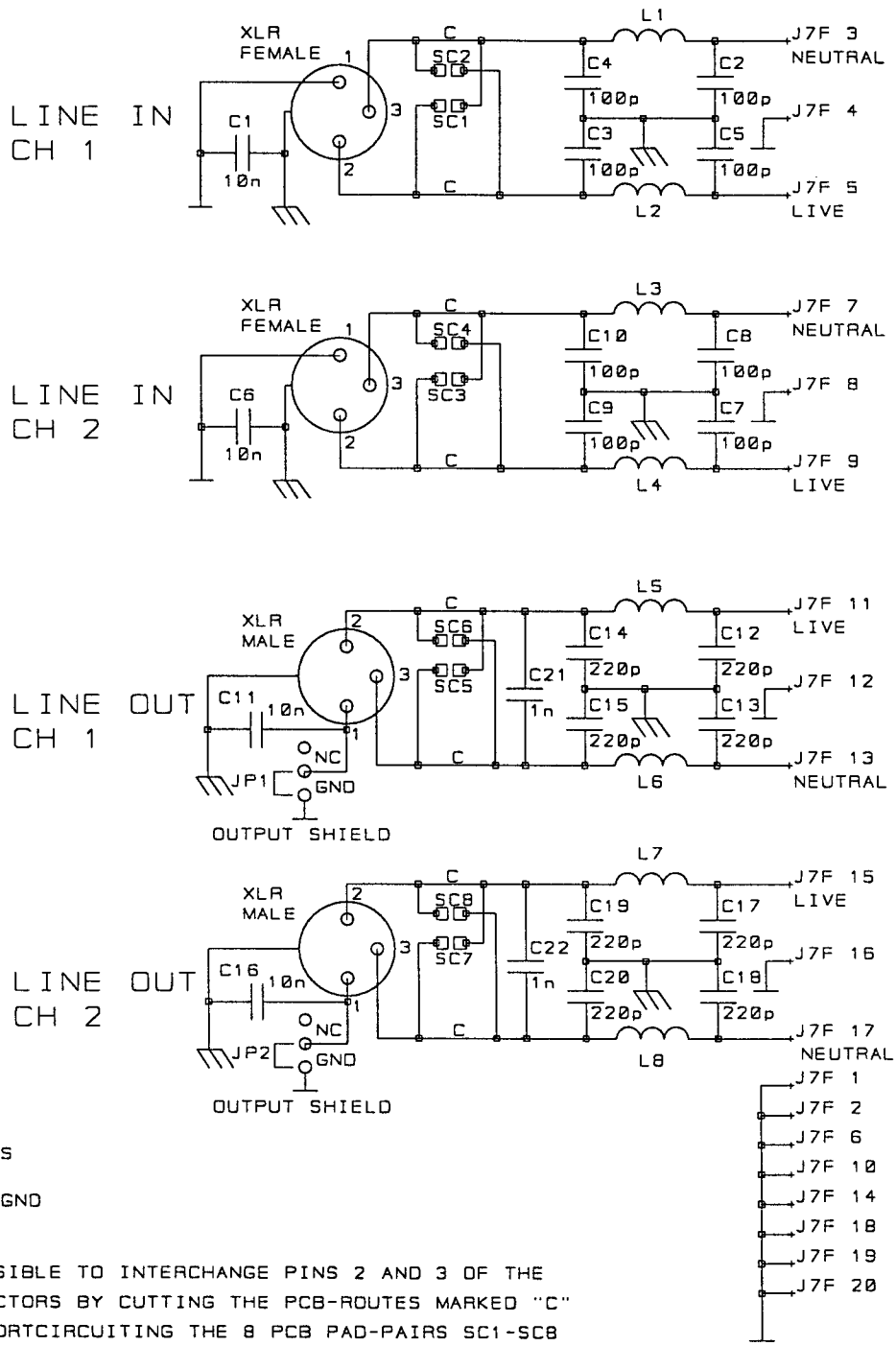

IT IS POSSIBLE TO INTERCHANGE PINS 2 AND 3 OF THE XLR-CONNECTORS BY CUTTING THE PCB-ROUTES MARKED "C" AND BY SHORTCIRCUITING THE 8 PCB PAD-PAIRS SC1-SC8

				ANV.	FRIDA	2485D1		
				LYREC OF DENMARK	* MALST.	TEGN.	JHE	9208
						KONF.		
						GODK.		
				XLR CONNECTOR BOARD	ERST.			
1	9208	JHE	RFI-FILTERING ADDED		MAPPE	2485		
NR.	DATO	SIGN.	AENDRING		ERSTS.	SHEET 1 OF 3		

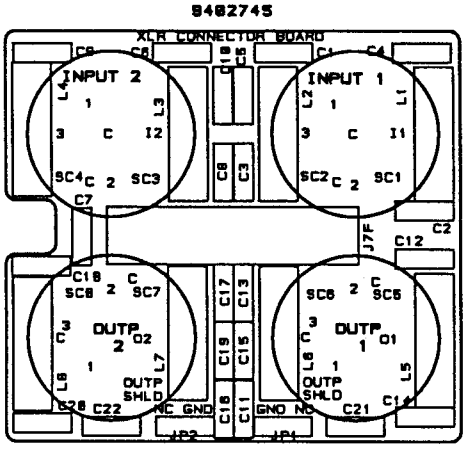

				ANV.	FRIDA	2485L1		
				LYREC OF DENMARK		* MALST.	TEGN.	JHE	9208
							KONF.		
							GOOK.		
				XLR CONNECTOR BOARD		ERST.		
						MAPPE	2485	
1	9208	JHE	CHANGED LAYOUT					
NR.	DATO	SIGN.	AENDRING			ERSTS.	SHEET 2 OF 3	

COMPONENT LIST

C1	10N	L1	FILTER COIL
C2	100P	L2	FILTER COIL
C3	100P	L3	FILTER COIL
C4	100P	L4	FILTER COIL
C5	100P	L5	FILTER COIL
C6	10N	L6	FILTER COIL
C7	100P	L7	FILTER COIL
C8	100P	L8	FILTER COIL
C9	100P		
C10	100P		
C11	10N		
C12	220P		
C13	220P		
C14	220P		
C15	220P		
C16	10N		
C17	220P		
C18	220P		
C19	220P		
C20	220P		
C21	1N		
C22	1N		

940274	REV. 1	REV. 1	REV. 1
PCB	SHEET 1	SHEET 2	SHEET 3
MATCHING CONFIGURATIONS			

				ANV.	FRIDA	2485C1		
				LYREC OF DENMARK	* MALST.	TEGN.	JHE	9208
						KONF.		
						GODK.		
				XLR CONNECTOR BOARD	ERST.			
					MAPPE	2485		
1	9208	JHE	COMP.LIST ADDED					
NR.	DATO	SIGN.	AENDRING		ERSTS.	SHEET 3 OF 3		

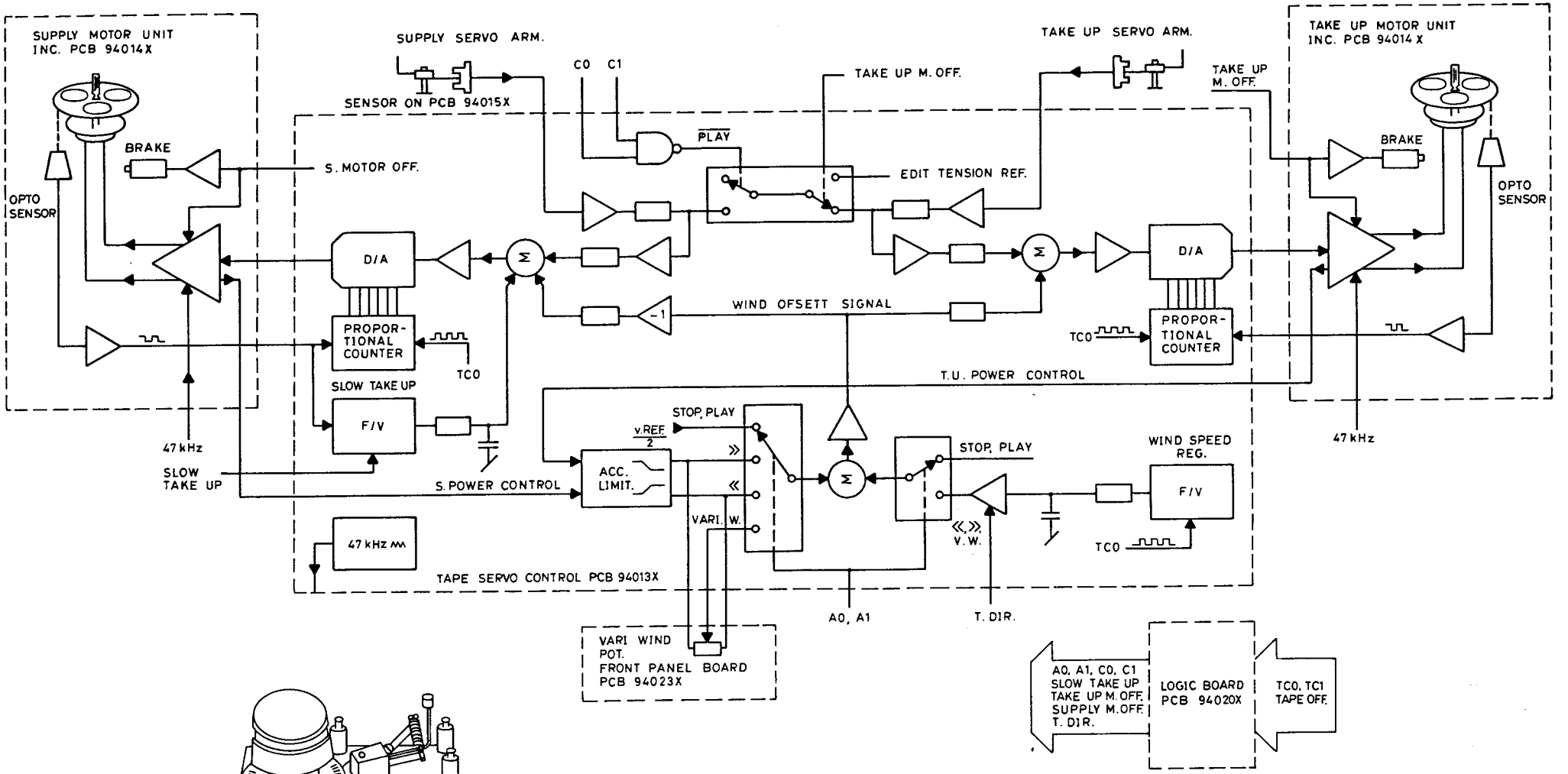

Nr.	Dato	Sign.	Ændring

ANV. FRIDA

Lyrec OF DENMARK

Tape transport system
Block Diagram

Målst.	Tegn.	ReS.BS	90.0104
	Konf.		
	Godk.		
Erst.			
Mappe	2486		
Ersts.			

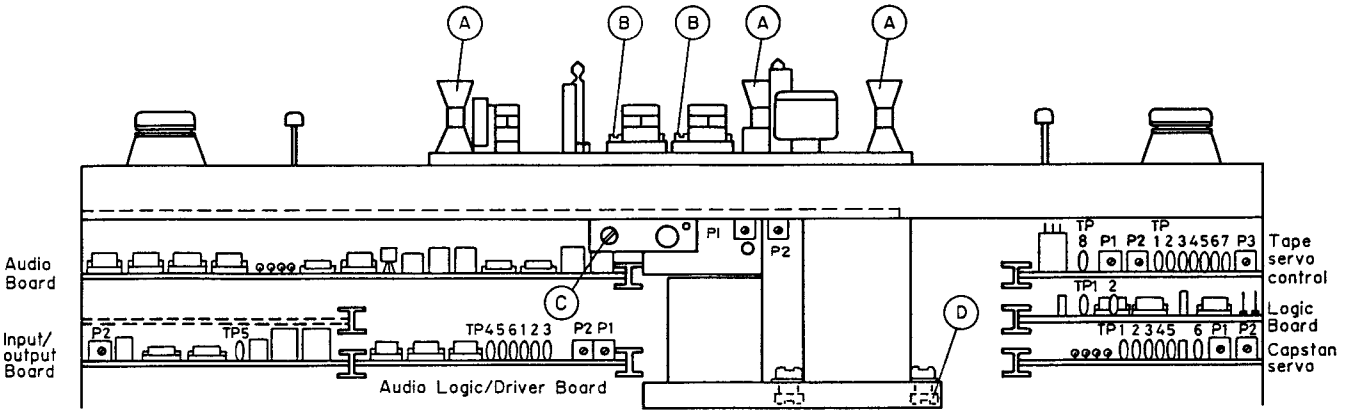

Mecanical Adjustments.

- (A) Tape Height
- (B) Azimuth
- (C) Pinch Roller Pressure 600-700gr.
- (D) Capstan Belt Tension

Electrical Adjustments.

Audio Logic/Driver board:

P1 Tape lift stop pos.
P2 Pinch Roller pause pos.
Note: Adjust P1 first.

Monitor board:

P1 PPM level Ch.1
P2 PPM level Ch.2

Tape servo control:

P1 Supply Tension Adj. for 45g at Reel
P2 Take up Tension, Adj. for 55g at Reel
P3 Wind Tension, 120g at Reel.

Capstan servo:

P1 Phase Lock adj.
P2 Loop Gain.
LED Lock

Nr.	Dato	Sign.	Ændring
1	90.09	KS	PPM JUST. TILF.

ANV. FRIDA

Lyrec OF DENMARK

Skilte til FRIDA II

Målst.	Tegn.	RES.BS	90.02
	Konf.		
	Godk.		
Erst.			
Mappe	2491		
Ersts.			

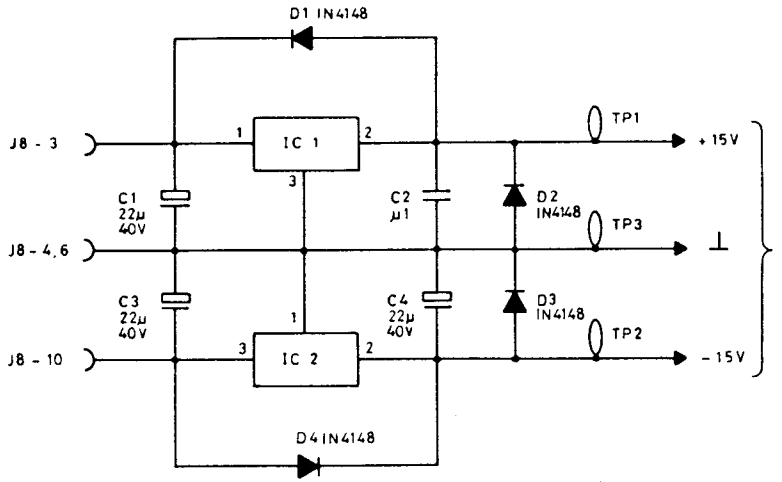

LOGIC
TAPE SERVO
CAPSTAN SERVO
LOGIC BOARD
MOTOR POWER AMP.
FRONT PANEL BOARD
TAPE TIMER/LOGIC SENSOR
AUDIO LOGIC/DRIVER BOARD

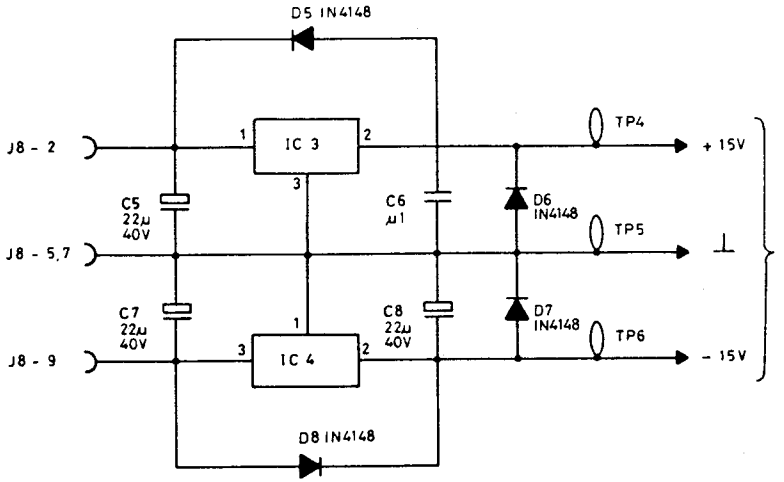

AUDIO
AUDIO BOARD
AUDIO LOGIC/(DRIVER BOARD)
INPUT/OUTPUT BOARD
POTMETER BOARD
MONITOR BOARD

CONNECTOR	TYPE		TO
J1	= 20p	RIBBON/IDC	MONITOR BOARD
J2	= 27p	G09	INPUT/OUTPUT BOARD
J3	= 29p	G09	AUDIO BOARD
J4	= 10p	IDC	MOTOR POWER AMP (SUPPLY)
J5	= 10p	IDC	TAPE TIMER/LOGIC/SENSOR
J6	= 40p	G09	AUDIO LOGIC/DRIVER BOARD
J7	= 20p	IDC	INPUT/OUTPUT CONNECTORS (XLR)
J8	= 13p	IH/EURO	POWER SUPPLY
J9	= 26p	IDC	REMOTE CONNECTOR
J10	= 26p	IDC	SYNCRO CONNECTOR
J11	= 10p	IDC	MOTOR POWER AMP (TAKE UP)
J12	= 20p	G09	TIME CODE BOARD
J13	= 20p	G09	TAPE SERVO
J14	= 14p	G09	CAPSTAN SERVO
J15	= 29p	G09	LOGIC BOARD
J16	= 20p	RIBBON/IDC	FRONT PANEL BOARD
J17	= 2p	JACK	+24V EXT.

IC 1,3 = LM7815CV
IC 2,4 = LM7915CV

Nr.	Dato	Sign.	Ændring

ANV. FRIDA

Lyrec DANMARK

Mælst.

Tegn ReS/BS 89.06.15
Konf
Godk

Mother Board

Erst. 2394
Mappe 2517
Sheet 1 of 3

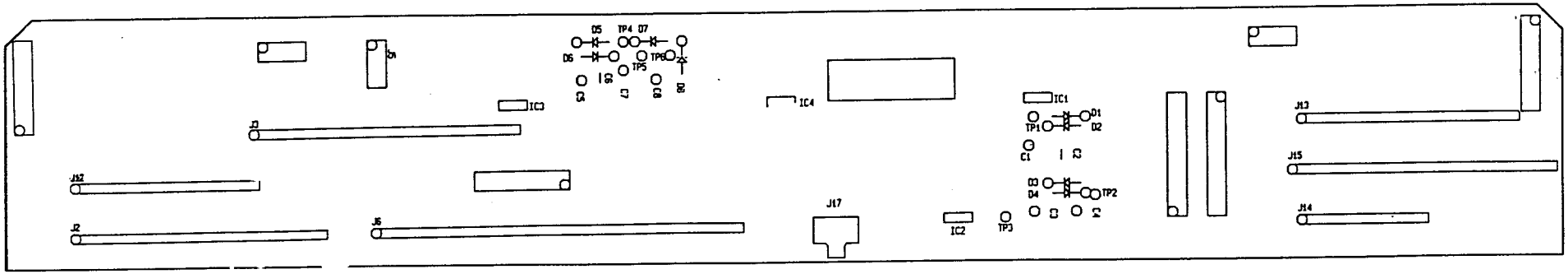

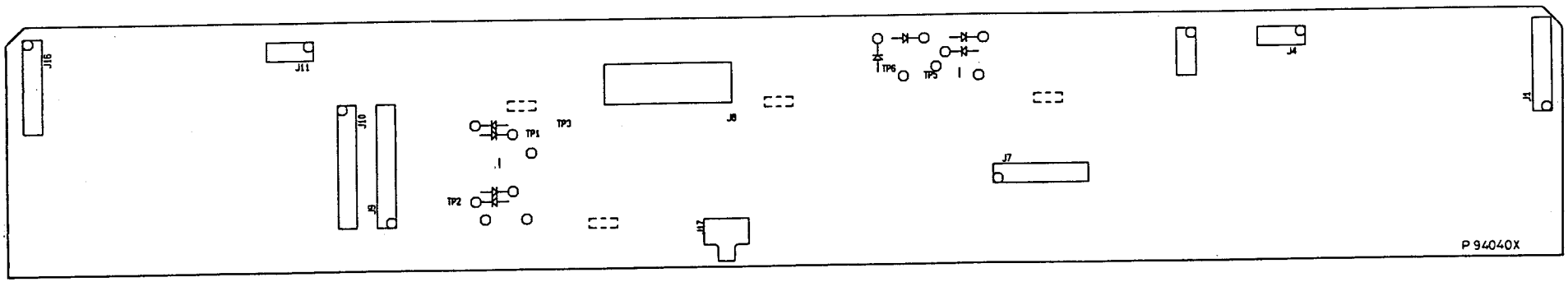

Nr.	Dato	Sign.	Ændring

ANV. FRIDA

Lyrec

Mother Board
Component layout

Målst.	Tegn.	ReS.BS	90.05.
	Kont.		
	Godk.		
Erst.	2394		
Mappe	2517		
	Sheet 2 of 3		

FRIDA MOTHERBOARD CONNECTION LIST

J1 CONNECTS TO:
MONITOR BOARD, J1

J1-1	J2-19
J1-2	J6-18
J1-3	J3-3
J1-4	J6-19
J1-5	J2-23
J1-6	J6-22
J1-7	J3-7
J1-8	J6-15
J1-9	J3-1
J1-10	IC3-2 (+15v)
J1-11	J2-17
J1-12	IC4-2 (-15v)
J1-13	J3-5
J1-14	IC3-3 IC4-1 J8-5,7 (GND)
J1-15	J2-21
J1-16	J12-15
J1-17	J6-20 J12-17
J1-18	J6-21 J12-18
J1-19	J6-16
J1-20	J6-17

J2 CONNECTS TO:
INPUT/OUTPUT BOARD, J1

J2-1	J7-3
J2-2	nc
J2-3	J7-5
J2-4	nc
J2-5	J7-7
J2-6	nc
J2-7	J7-9
J2-8	nc
J2-9	J7-11
J2-10	nc
J2-11	J7-13
J2-12	nc
J2-13	J7-15
J2-14	nc
J2-15	J7-17
J2-16	nc
J2-17	J1-11
J2-18	nc
J2-19	J1-1
J2-20	nc
J2-21	J1-15
J2-22	nc
J2-23	J1-5
J2-24	IC3-2 (+15V)
J2-25	IC3-3 IC4-1 J8-5,7 (GND)
J2-26	IC3-3 IC4-1 J8-5,7 (GND)
J2-27	IC4-2 (-15V)

J3 CONNECTS TO:
AUDIO BOARD, J1

J3-1	J1-9
J3-2	nc
J3-3	J1-3
J3-4	nc
J3-5	J1-13
J3-6	nc
J3-7	J1-7
J3-8	IC3-2 (+15V)
J3-9	IC3-3 IC4-1 J8-5,7 (GND)
J3-10	nc
J3-11	IC4-2 (-15V)
J3-12	nc
J3-13	nc
J3-14	J6-27 J9-20 J14-9 J15-26 J16-16
J3-15	J6-26 J9-18 J14-10 J15-27 J16-15
J3-16	J6-1
J3-17	J6-2
J3-18	J6-3
J3-19	J6-4
J3-20	J6-5
J3-21	J6-6
J3-22	J6-7 J9-22
J3-23	J6-8 J9-24
J3-24	J6-9
J3-25	J6-11
J3-26	J6-10
J3-27	J6-12
J3-28	J6-13 J12-14
J3-29	J6-14

J4 CONNECTS TO:
MOTOR POWER AMP (SUPPLY), J1

J4-1	IC1-2 (+15V)
J4-2	nc
J4-3	IC2-2 (-15V)
J4-4	J4-5 J13-10
J4-5	J4-4 J13-10
J4-6	J13-13
J4-7	J11-7 J13-9
J4-8	J13-5
J4-9	J11-9 J13-14
J4-10	nc

J5 CONNECTS TO:
TAPE TIMER, J1

J5-1	J13-21
J5-2	IC1-2 (+15V)
J5-3	J8-12 (+5V)
J5-4	IC2-2 (-15V)
J5-5	J9-25
J5-6	J13-11 J15-13
J5-7	IC1-3 IC2-1 J8-4,6 (GND)
J5-8	J10-23 J13-8 J15-9
J5-9	IC1-3 IC2-1 J8-4,6 (GND)
J5-10	J15-10

J6 CONNECTS TO:
AUDIO LOGIC/DRIVER BOARD, J1

J6-1	J3-16
J6-2	J3-17
J6-3	J3-18
J6-4	J3-19
J6-5	J3-20
J6-6	J3-21
J6-7	J3-22 J9-22
J6-8	J3-23 J9-24
J6-9	J3-24
J6-10	J3-25
J6-11	J3-26
J6-12	J3-27
J6-13	J3-28 J12-14
J6-14	J3-29
J6-15	J1-8
J6-16	J1-19
J6-17	J1-20
J6-18	J1-2
J6-19	J1-4
J6-20	J1-17 J12-17
J6-21	J1-18 J12-18
J6-22	J1-6
J6-23	J14-14
J6-24	J13-15 J15-16
J6-25	J13-16 J15-17
J6-26	J3-15 J9-18 J14-10 J15-27 J16-15
J6-27	J3-14 J9-20 J14-9 J15-26 J16-16
J6-28	J12-19 J13-23 J15-14
J6-29	J12-20 J13-22 J15-15
J6-30	J10-18 J12-13 J15-5
J6-31	J15-6
J6-32	IC3-2 (+15V)
J6-33	IC3-3 IC4-1 J8-5,7 (GND)
J6-34	IC4-2 (-15V)
J6-35	nc
J6-36	IC2-2 (-15V)
J6-37	IC1-3 IC2-1 J8-4,6 (GND)
J6-38	IC1-2 (+15V)
J6-39	J8-8 (GND)
J6-40	J8-13 (+24V)

J7 CONNECTS TO:
XLR BOARD, J1

J7-1	IC3-3 IC4-1 J8-5,7 (GND)
J7-2	IC3-3 IC4-1 J8-5,7 (GND)
J7-3	J2-1
J7-4	IC3-3 IC4-1 J8-5,7 (GND)
J7-5	J2-3
J7-6	IC3-3 IC4-1 J8-5,7 (GND)
J7-7	J2-5
J7-8	IC3-3 IC4-1 J8-5,7 (GND)
J7-9	J2-7
J7-10	IC3-3 IC4-1 J8-5,7 (GND)
J7-11	J2-9
J7-12	IC3-3 IC4-1 J8-5,7 (GND)
J7-13	J2-11
J7-14	IC3-3 IC4-1 J8-5,7 (GND)
J7-15	J2-13
J7-16	IC3-3 IC4-1 J8-5,7 (GND)
J7-17	J2-15
J7-18	IC3-3 IC4-1 J8-5,7 (GND)
J7-19	IC3-3 IC4-1 J8-5,7 (GND)
J7-20	IC3-3 IC4-1 J8-5,7 (GND)

J8 CONNECTS TO:
PSU BOARD, J1

J8-1	nc
J8-2	IC3-1 (+21V U.REG)
J8-3	IC1-1 (+21V U.REG)
J8-4	IC1-3 IC2-1 (LOGIC GND)
J8-5	IC3-3 IC4-1 (ANALOG GND)
J8-6	IC1-3 IC2-1 (LOGIC GND)
J8-7	IC3-3 IC4-1 (ANALOG GND)
J8-8	J6-39 J14-2 J15-3 J15-11 J16-1 J16-2 (POWER GND)
J8-9	IC4-3 (-21V U.REG)
J8-10	IC2-3 (-21V U.REG)
J8-11	J9-5 J10-5 J15-1 J16-3 (+10V U.REG)
J8-12	J5-3 J9-6 J10-6 J12-4 (+5V REG.)
J8-13	J6-40 J14-4 (+24V REG.)

J9 CONNECTS TO:
REMOTE CONNECTOR

J9-1	IC1-3 IC2-1 J8-4,6 (GND)
J9-2	IC1-2 (+15V)
J9-3	IC1-3 IC2-1 J8-4,6 (GND)
J9-4	IC2-2 (-15V)
J9-5	J8-11 (+10V)
J9-6	J8-12 (+5V)
J9-7	J15-18
J9-8	J15-19
J9-9	J10-9 J16-13
J9-10	J16-7
J9-11	J10-11 J16-10
J9-12	J10-14 J15-22
J9-13	J10-13 J16-11
J9-14	J16-8
J9-15	J10-15 J16-12

J9-16	J10-16 J15-21
J9-17	J10-17 J16-9
J9-18	J3-15 J6-26 J14-10 J15-27 J16-15
J9-19	J14-5
J9-20	J3-14 J6-27 J14-9 J15-26 J16-16
J9-21	J14-6
J9-22	J3-22 J6-7
J9-23	J16-14
J9-24	J3-23 J6-8
J9-25	J5-5
J9-26	nc

J10 CONNECTS TO:
SYNCRO CONNECTOR

J10-1	IC1-3 IC2-1 J8-4,6 (GND)
J10-2	IC1-2 (+15V)
J10-3	IC1-3 IC2-1 J8-4,6 (GND)
J10-4	IC2-2 (-15V)
J10-5	J8-11 (+10V)
J10-6	J8-12 (+5V)
J10-7	J12-5
J10-8	J12-6
J10-9	J9-9 J16-13
J10-10	J15-23
J10-11	J9-11 J16-10
J10-12	J15-24
J10-13	J9-13 J16-11
J10-14	J15-22 J9-12
J10-15	J9-15 J16-12
J10-16	J9-16 J15-21
J10-17	J9-17 J16-9
J10-18	J6-30 J12-13 J15-5
J10-19	J14-7
J10-20	nc
J10-21	J14-8
J10-22	J12-8
J10-23	J5-8 J13-8 J15-9
J10-24	J12-9
J10-25	J13-24 J15-20
J10-26	nc

J11 CONNECTS TO:
MOTOR POWER AMP (TAKE UP), J1

J11-1	IC1-2 (+15V)
J11-2	nc
J11-3	IC2-2 (-15V)
J11-4	J11-5 J13-20 J15-25
J11-5	J11-4 J13-20 J15-25
J11-6	J13-12
J11-7	J4-7 J13-9
J11-8	J13-4
J11-9	J4-9 J13-14
J11-10	nc

J12 CONNECTS TO:
TIME CODE BOARD, J1

J12-1	IC1-2 (+15V)
J12-2	IC1-3 IC2-1 J8-4,6 (GND)
J12-3	IC2-2 (-15V)
J12-4	J8-12 (+5V)
J12-5	J10-7
J12-6	J10-8
J12-7	IC1-3 IC2-1 J8-4,6 (GND)
J12-8	J10-22
J12-9	J10-24
J12-10	J16-18
J12-11	J16-17
J12-12	J6-31 J15-6
J12-13	J6-30 J10-18 J15-5
J12-14	J3-28 J6-13
J12-15	J1-16
J12-16	nc
J12-17	J1-17 J6-20
J12-18	J1-18 J6-21
J12-19	J6-28 J13-23 J15-14
J12-20	J6-29 J13-22 J15-15

J13 CONNECTS TO:
TAPE SERVO CONTROL, J1

J13-1	IC1-2 (+15V)
J13-2	IC1-3 IC2-1 J8-4,6 (GND)
J13-3	IC2-2 (-15V)
J13-4	J11-8
J13-5	J4-8
J13-6	J15-7
J13-7	J15-8
J13-8	J5-8 J10-23 J15-9
J13-9	J4-7 J11-7
J13-10	J4-4 J4-5
J13-11	J5-6 J15-13
J13-12	J11-6
J13-13	J4-6
J13-14	J4-9 J11-9
J13-15	J6-24 J15-16
J13-16	J6-25 J15-17
J13-17	J16-4
J13-18	J16-5
J13-19	J16-6
J13-20	J11-4 J11-5 J15-25
J13-21	J5-1
J13-22	J6-29 J12-20 J15-15
J13-23	J6-28 J12-19 J15-14
J13-24	J10-25 J15-20

J14 CONNECTS TO:
CAPSTAN SERVO, J1

J14-1	IC1-2 (+15V)
J14-2	J8-8 (GND)
J14-3	IC2-2 (-15V)
J14-4	J8-13 (+24V)
J14-5	J9-19
J14-6	J9-21
J14-7	J10-19
J14-8	J10-21
J14-9	J3-14 J6-27 J9-20 J15-26 J16-16
J14-10	J3-15 J6-26 J9-18 J15-27 J16-15
J14-11	J15-12

J14-12	nc
J14-13	nc
J14-14	J6-23

J15 CONNECTS TO:
LOGIC BOARD, J1

J15-1	J8-11 (+10V)
J15-2	IC1-2 (+15V)
J15-3	J8-8 (GND)
J15-4	nc
J15-5	J6-30 J10-18 J12-13
J15-6	J6-31 J12-12
J15-7	J13-6
J15-8	J13-7
J15-9	J5-8 J10-23 J13-8
J15-10	J5-10
J15-11	J8-8 (GND)
J15-12	J14-11
J15-13	J5-6 J13-11
J15-14	J6-28 J12-19 J13-23
J15-15	J6-29 J12-20 J13-22
J15-16	J6-24 J13-15
J15-17	J6-25 J13-16
J15-18	J9-7
J15-19	J9-8
J15-20	J10-25 J13-24
J15-21	J9-16 J10-16
J15-22	J10-14
J15-23	J10-10
J15-24	J10-12
J15-25	J11-4 J11-5 J13-20
J15-26	J3-14 J6-27 J9-20 J14-9 J16-16
J15-27	J3-15 J6-26 J9-18 J14-10 J16-15
J15-28	J16-19
J15-29	J16-20

J16 CONNECTS TO:
FRONT PANEL BOARD, J1

J16-1	J8-8 (GND)
J16-2	J8-8 (GND)
J16-3	J8-11 (+10V)
J16-4	J13-17
J16-5	J13-18
J16-6	J13-19
J16-7	J9-10
J16-8	J9-14
J16-9	J9-17 J10-17
J16-10	J9-11 J10-11
J16-11	J9-13 J10-13
J16-12	J9-15 J10-15
J16-13	J9-9 J10-9
J16-14	J9-23
J16-15	J3-15 J6-26 J9-18 J14-10 J15-27
J16-16	J3-14 J6-27 J9-20 J14-9 J15-26
J16-17	J12-11
J16-18	J12-10
J16-19	J15-28
J16-20	J15-29

J17 CONNECTS TO:
PANEL AMP, J4

J17-1	J8-13 (+24V)
J17-2	IC1-3 IC2-1 J8-4,6 (GND)

NOTE 1: POWER SUPPLY CONNECTIONS FOR CONNECTORS ONLY SHOWN FOR FINAL DESTINATION, I.E. REGULATOR IC'S OR J8 (PSU CONNECTOR).

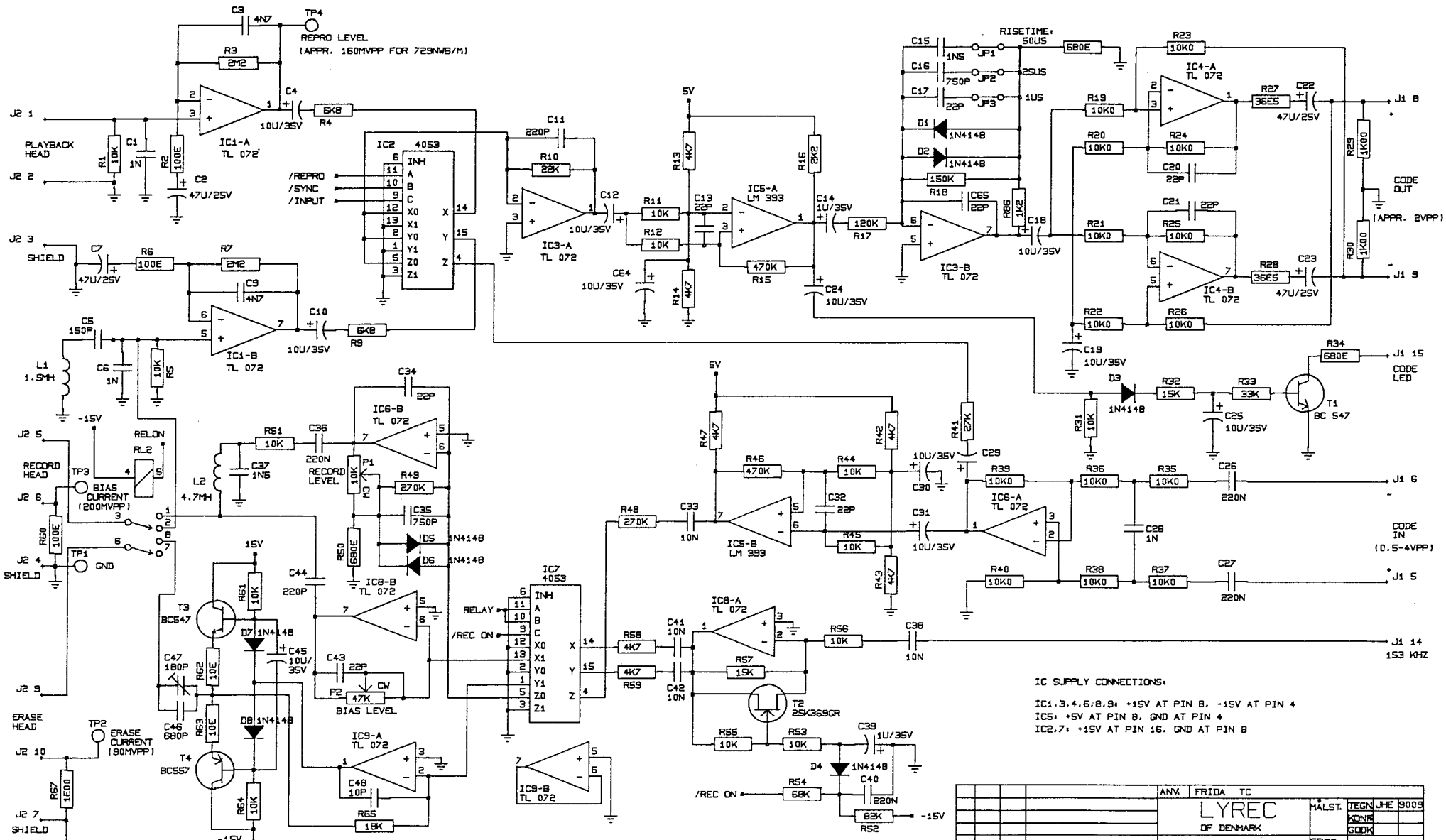
REPRO LEVEL
(APPR. 160MVPP FOR 729NWB/M)
PLAYBACK HEAD
SHIELD
RECORD HEAD
BIAS CURRENT (200MVPP)
GND
ERASE HEAD
ERASE CURRENT (90MVPP)
RECORD LEVEL
BIAS LEVEL
RISETIME: 50US
CODE OUT
(APPR. 2VPP)
CODE LED
CODE IN (0.5-4VPP)
153 KHZ
/REPRO
/SYNC
/INPUT
RELAY
/REC ON
IC1-A TL 072
IC1-B TL 072
IC2 4053
IC3-A TL 072
IC3-B TL 072
IC4-A TL 072
IC4-B TL 072
IC5-A LM 393
IC5-B LM 393
IC6-A TL 072
IC6-B TL 072
IC7 4053
IC8-A TL 072
IC8-B TL 072
IC9-A TL 072
IC9-B TL 072
T1 BC 547
T2 2SK369GR
T3 BC547
T4 BC557
RL2 RELON
IC SUPPLY CONNECTIONS:
IC1,3,4,6,8,9: +15V AT PIN 8, -15V AT PIN 4
IC5: +5V AT PIN 8, GND AT PIN 4
IC2,7: +15V AT PIN 16, GND AT PIN 8
NOTE: / DENOTES ACTIVE LOW LOGIC SIGNAL
ANV. FRIDA TC
LYREC
OF DENMARK
TCBOARD
PLAY/REC/ERASE CIRCUIT
MÅLST.
TEGN. JHE 9005
KONR.
GODK.
ERST.
MAPPE. 2561
ERSTS. SHEET 1 OF 3
1 9010 JHE DIV. ÆNDRINGER
NR. DATO SIGN. ÆNDRING

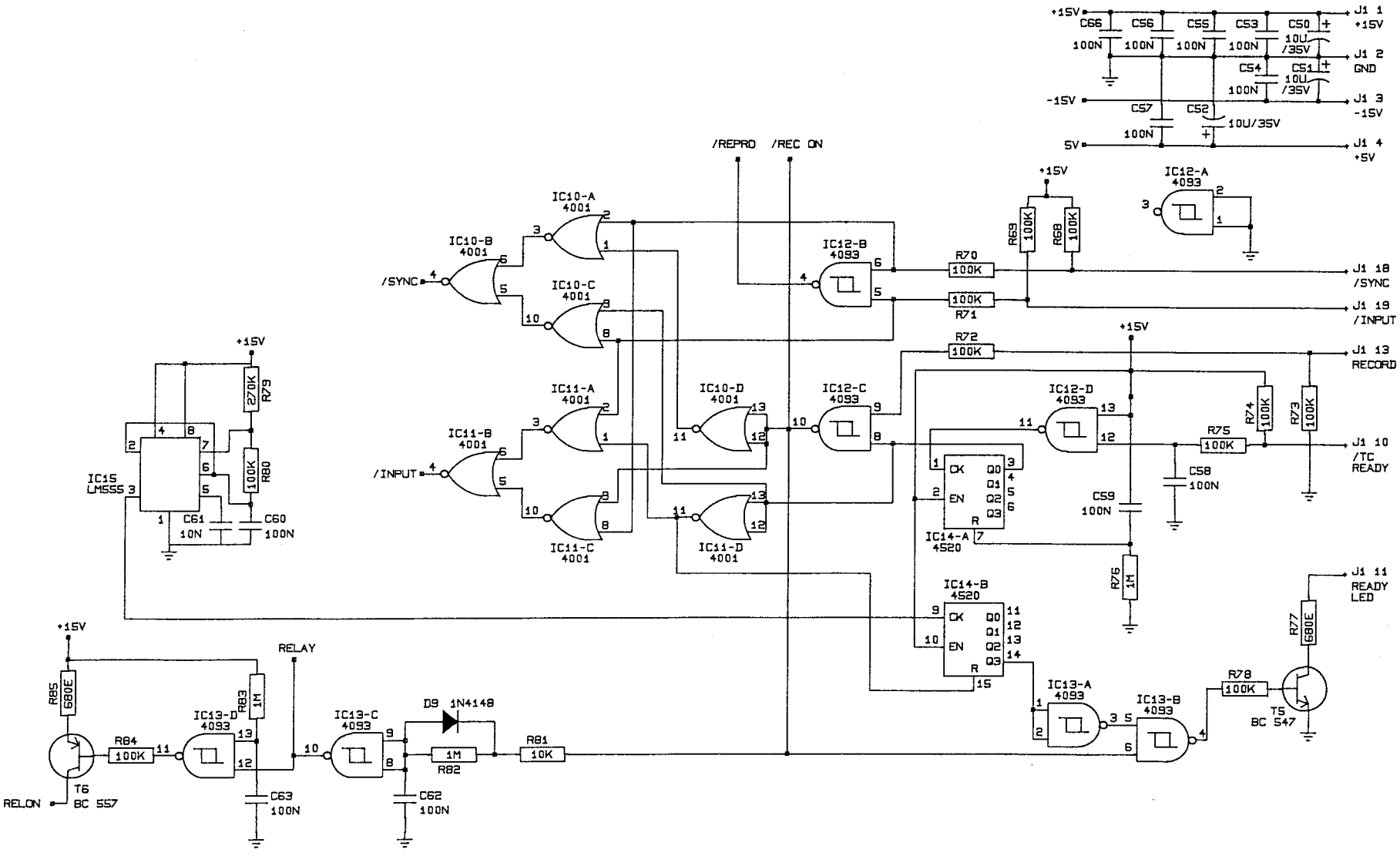

IC SUPPLY CONNECTIONS:

IC10,11,12,13: +15V AT PIN 14, GND AT PIN 7
IC14: +15V AT PIN 16, GND AT PIN 8
IC15: SEE DIAGRAM

NOTE: / DENOTES ACTIVE LOW LOGIC SIGNAL

				ANV.	FRIDA TC			
				LYREC OF DENMARK	MÅLST.	TEGN	JHE	9009
						KONR		
						GODK		
				TCBOARD CONTROL CIRCUITRY	ERST.			
					MAPPE.	2561		
NR.	DATO	SIGN.	ÆNDRING		ERSTS.	SHEET 2 OF 3		

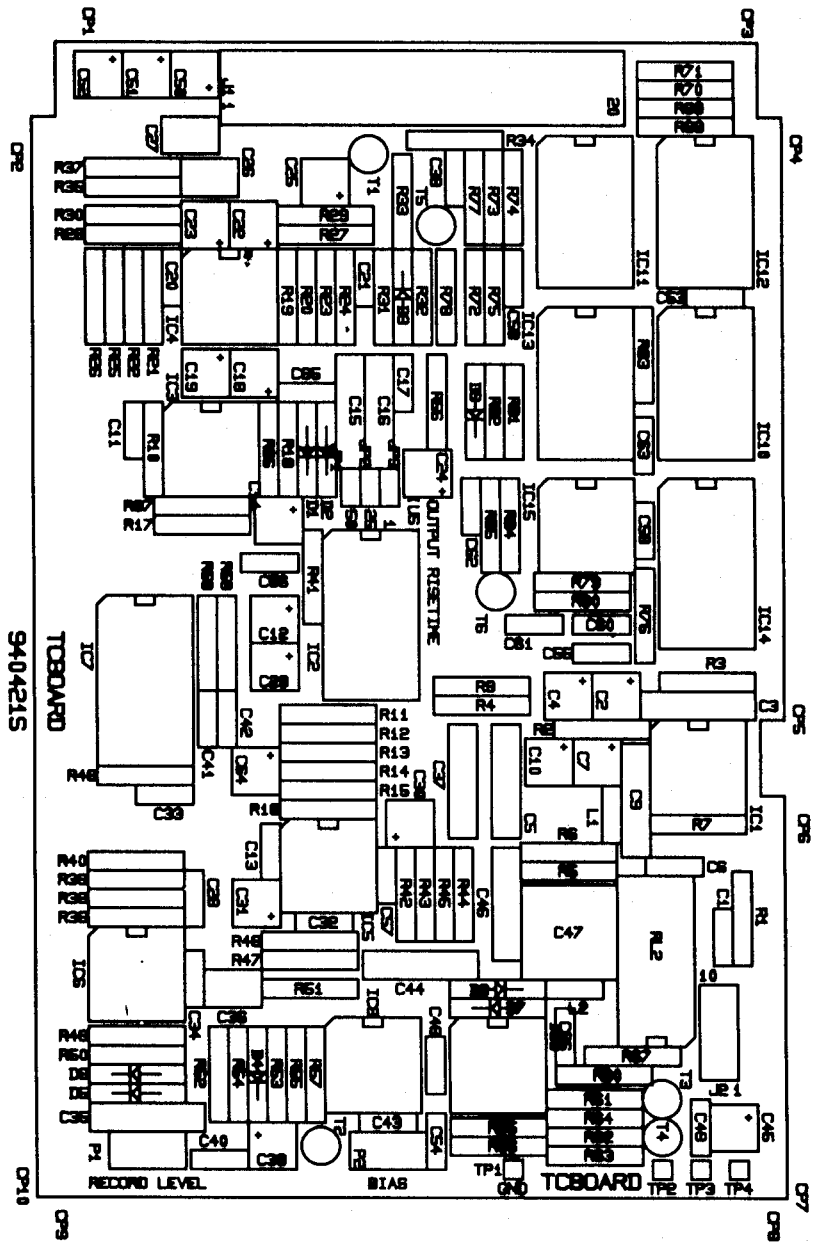

				ANV.	FRIDA TC			
				Lyrec OF DENMARK		Målst.	Tegn.	JHE	90.09
							Konf.		
							Godk.		
				TC Board Component layout		Erst.		
						Mappe	2561	
Nr.	Dato	Sign.	Ændring			Ersts.	Sheet 3 of 3	

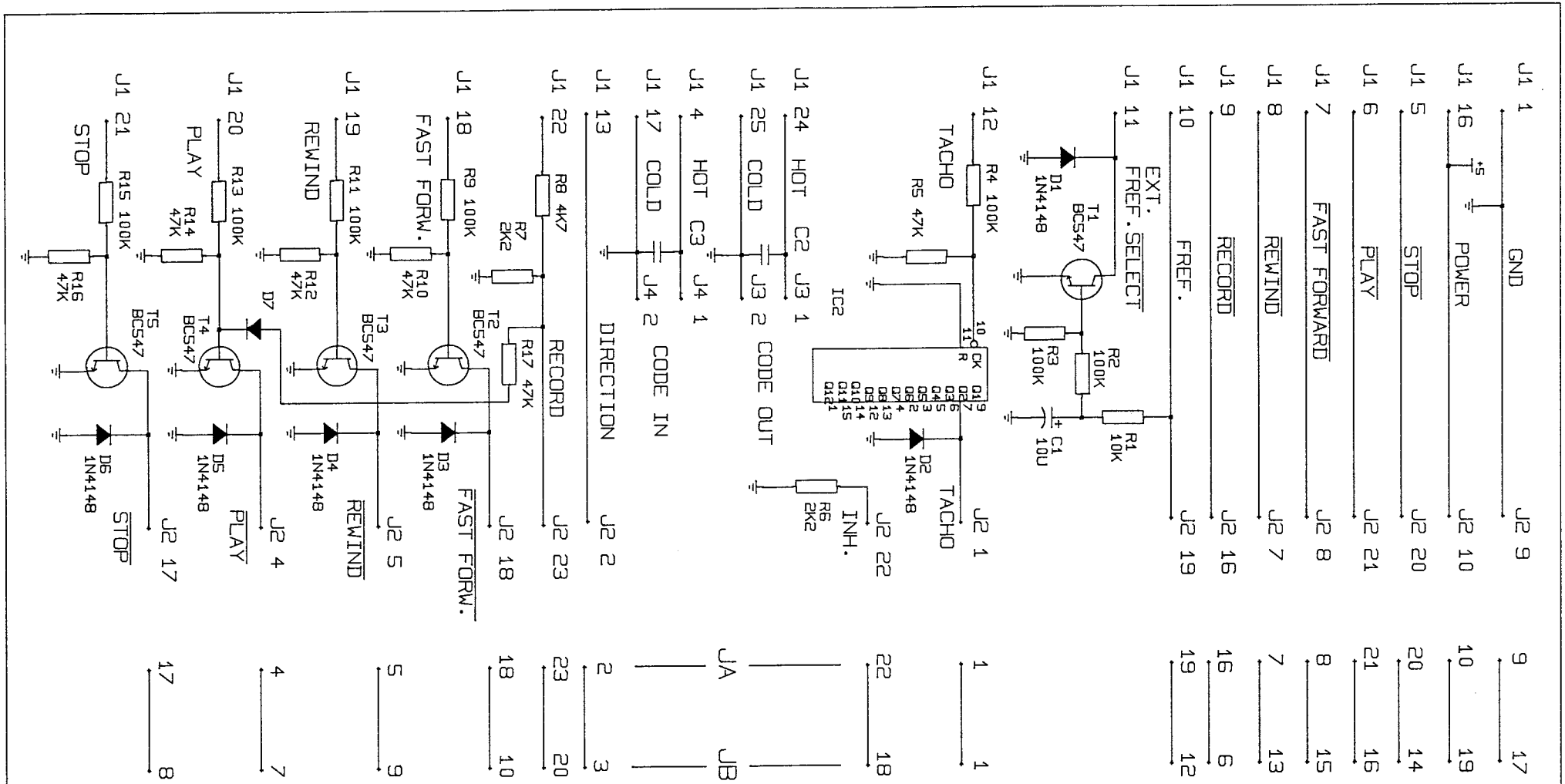

J1 = 25P F.MALE SUB-D TO FRIDA
J2 = 25P MALE SUB-D TO INTERFACE CABLE
J3 = 2P PHONO CODE OUT
J4 = 2P PHONO CODE IN

JA = 25P F.MALE INTERFACE CABLE
JB = 20P IDC INTERFACE CABLE
TO FOSTEX

IC SUPPLY CONN.			
NR	TYPE	+5	GND
1	4040	16	8

NR.	DATO	SIGN.	AENDRING

ANV.	FRIDA	2576D0	94049X
LYREC OF DENMARK		MÅLST.	TEGN. RES 90.10
			KONF.
			GODK.
FRIDA - FOSTEX INTERFACE		ERST.	
		MAPPE	2576
		ERSTS.	SHEET 1 OF 3

940491S

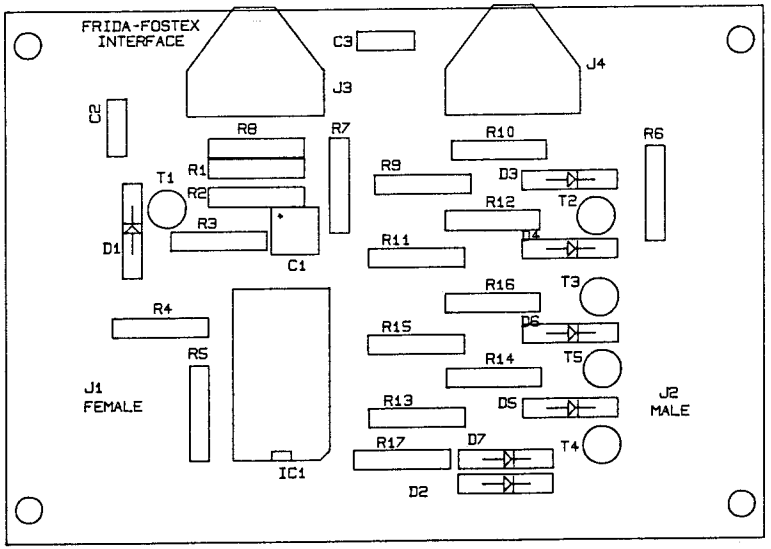

PCB 940491

				ANV.	FRIDA	2576L0		
				LYREC OF DENMARK		MÅLST.	TEGN.	RES	90.10
							KONF.		
							GODK.		
				FRIDA - FOSTEX INTERFACE		ERST.		
						MAPPE	2576	
NR.	DATO	SIGN.	AENDRING			ERSTS.	SHEET 2 OF 3	

COMPONENT LIST.

R1 10K	C1 10U 35V	D1 1N4148	IC1 4040
R2 100K	C2 10N	D2 1N4148	
R3 100K	C3 10N	D3 1N4148	
R4 100K		D4 1N4148	
R5 47K		D5 1N4148	
R6 2K2		D6 1N4148	
R7 2K2		D7 1N4148	
R8 4K7			J1 25P F.MALE SUB-D
R9 100K			J2 25P MALE SUB-D
R10 47K			J3 2P PHONO
R11 100K			J4 2P PHONO
R12 47K			
R13 100K		T1 BC547B	
R14 47K		T2 BC547B	
R15 100K		T3 BC547B	
R16 47K		T4 BC547B	
R17 47K		T5 BC547B	

940491	REV.0	REV.0	REV.0	
PCB	DIAGRAM PG.1	PG.2	PG.3	PG.4
MATCHING CONFIGURATIONS				

				ANV.	FRIDA	2576C0		
				LYREC OF DENMARK		MÅLST.	TEGN.	RES	90.11
							KONF.		
							GODK.		
				FRIDA - FOSTEX INTERFACE		ERST.			
						MAPPE	2576		
NR.	DATO	SIGN.	AENDRING			ERSTS.	SHEET 3 OF 3		

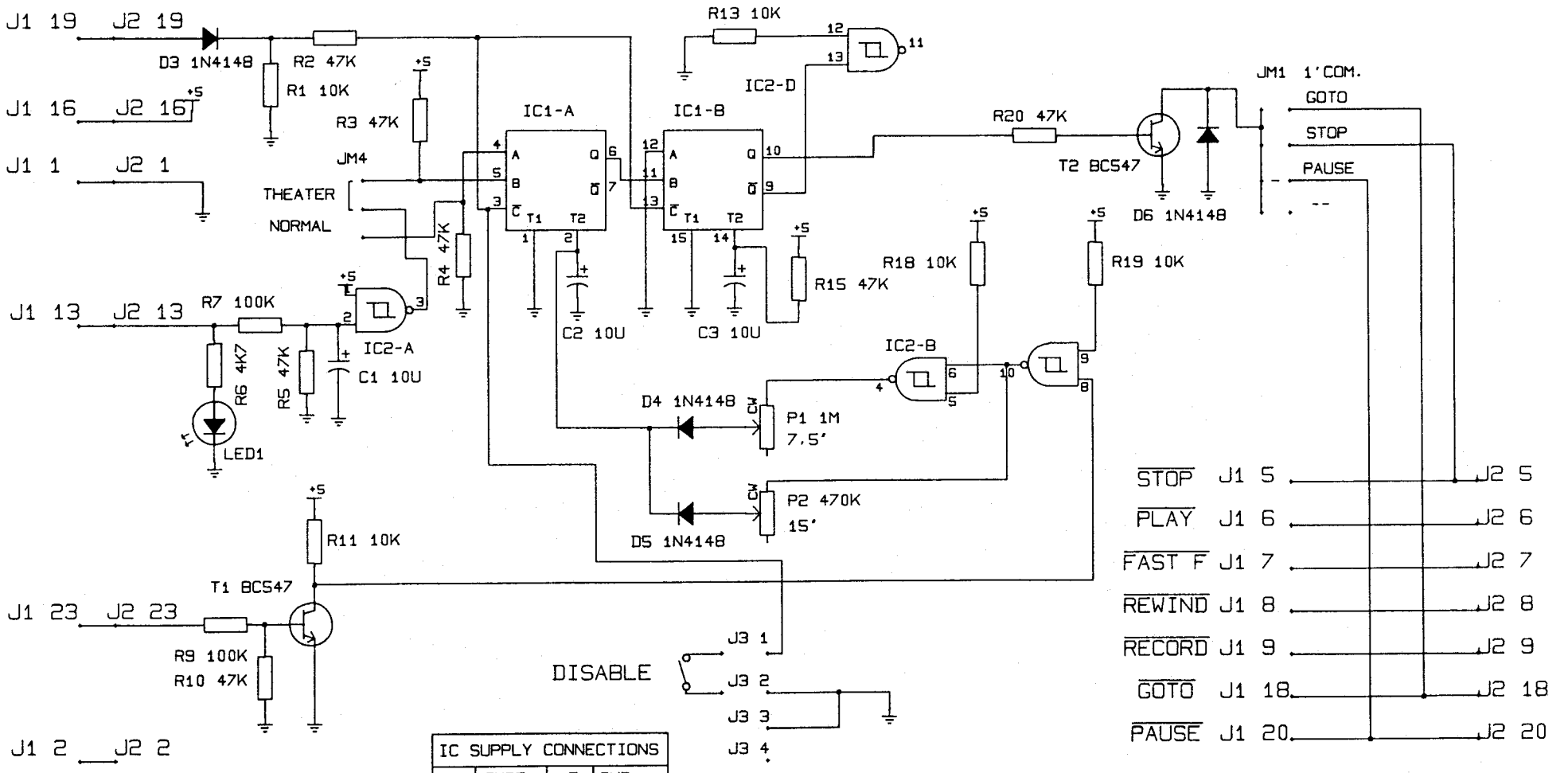

IC SUPPLY CONNECTIONS			
NR.	TYPE	+5	GND
1	4538	16	8
2	4093	14	7

J1 = 25P MALE D-SUB

J2 = 25P F.MALE D-SUB

J1 AND J2 IN PARALLEL

NR.	DATO	SIGN.	AENDRING

ANV. FRIDA

LYREC OF DENMARK

THEATER DELAY

2578D0 2578P0

MÅLST. TEGN. RES 90.10

KONF.

GODK.

ERST.

MAPPE 2578

ERSTS. SHEET 1 OF 3

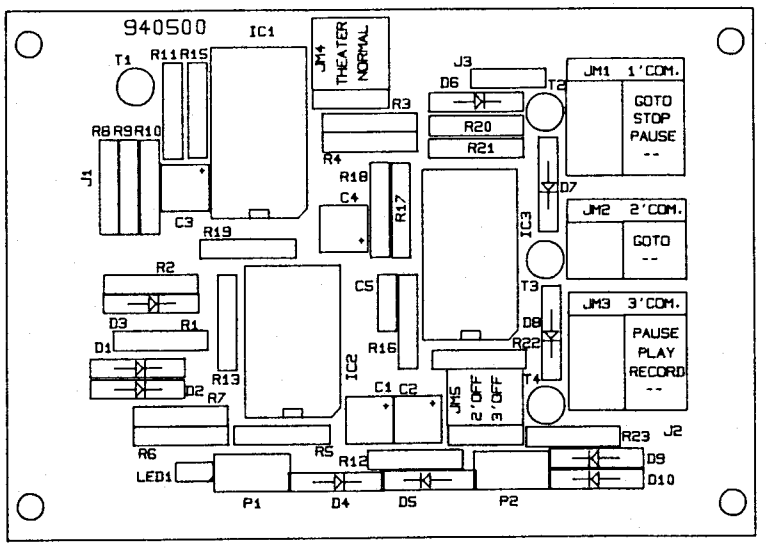

				ANV.	FRIDA	2578L0		
				LYREC OF DENMARK		MÅLST.	TEGN. RES	90.10
							KONF.	
							GODK.	
				THEATER DELAY		ERST.		
						MAPPE	2578	
NR.	DATO	SIGN.	AENDRING			ERSTS.	SHEET 2 OF 3	

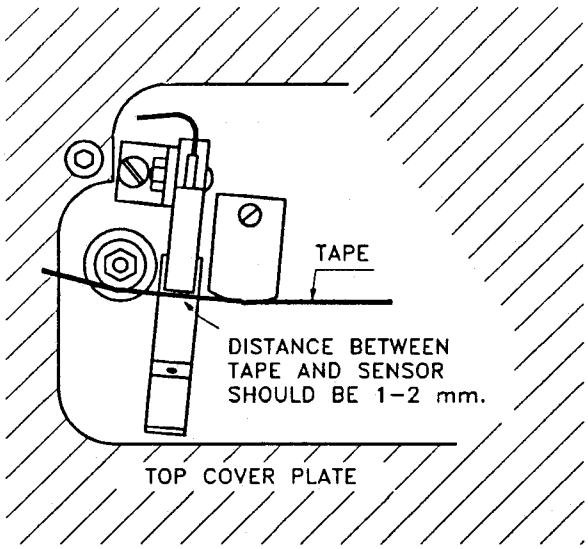

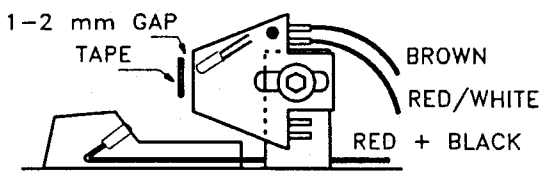

IR-DIODE MOVED FROM REFLECTOR HOUSING.

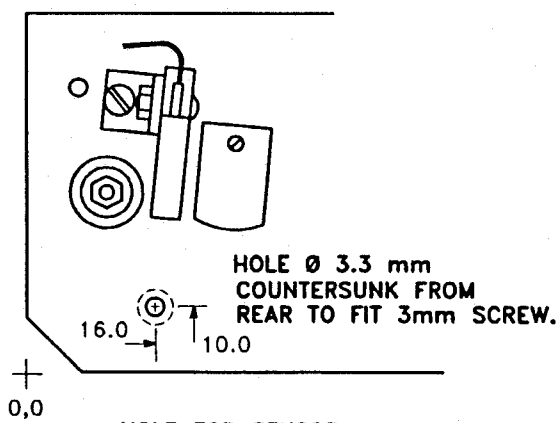

HOLE FOR SENSOR

				Anv.	FRIDA		260410	
				Lyrec OF DENMARK		Målst. 1:1	Tegn	RES	91.01
							Godk.		
				MONTAGE AF THEATER DELAY		Erst.		
						Mappe	2604	
Nr.	Dato	Sign	Ændring			Ersts.		

1

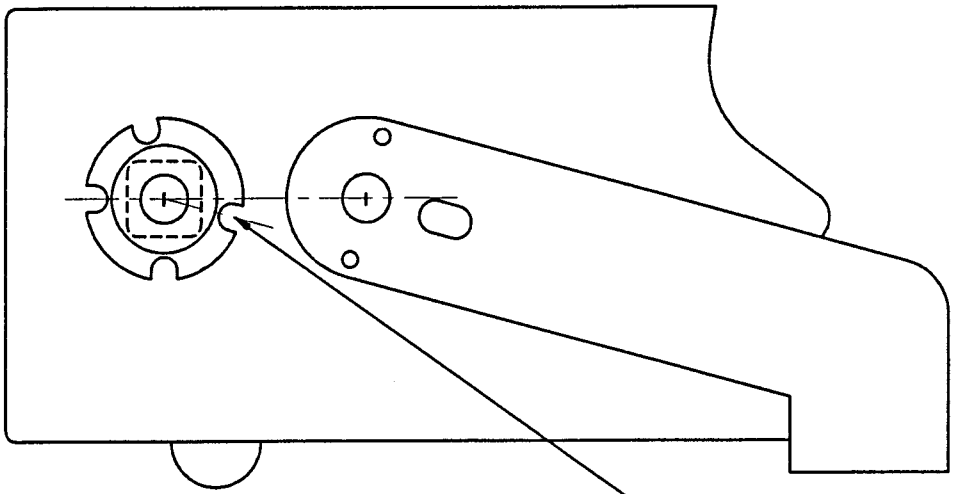

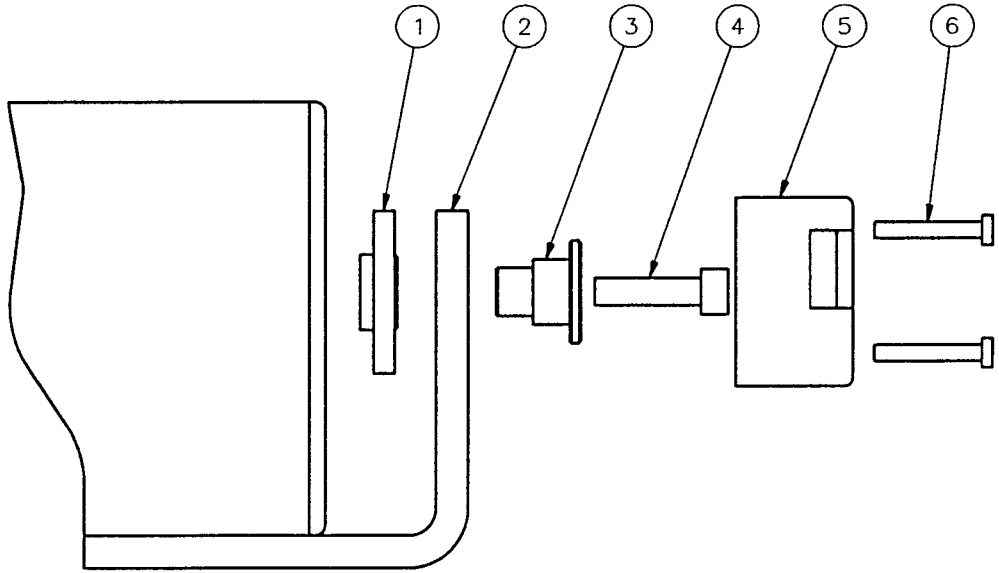

2

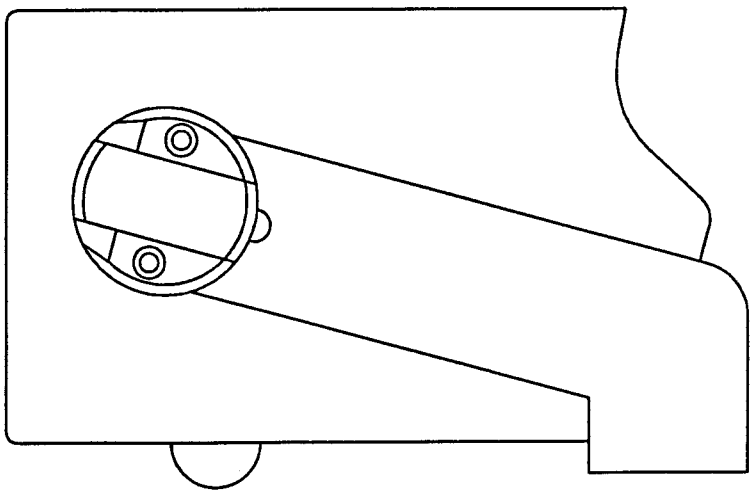

Note: This part may be inserted in four different positions. In the correct position the notch is pointing slightly downwards as indicated. Otherwise the handle spring lock will not lock in the proper positions. Please check this on both sides of the tape deck.

Item	Part	#	Description
1	823100	2	Code washer
2	823750	1	Handle bar
3	823090	2	Bushing
4	974820	2	Screw M5x16, DIN 912
5		2	Lock, each consisting of:
	823150	1	Housing
	823010	1	Latch
	823050	1	Spring
	970448	1	Hardened pin, ø3x20, DIN 6325
	970445	1	Hardened pin, ø5x20, DIN 6325
6	974647	4	Screw M3x16, DIN 7984
	455501		Handle complete

Nr.	Dato	Sign	Ændring
3	93.07	KS	Part list added
2	91.01	KS	Text added
1	91.0	KS	centerlinier tilføjet

Anv. FRIDA 2646i3

Lyrec

Installation of handle

Målst.	Tegn	KS	91.01.21
1:1	Godk.		
Erst.			
Mappe	2646		
Ersts.			

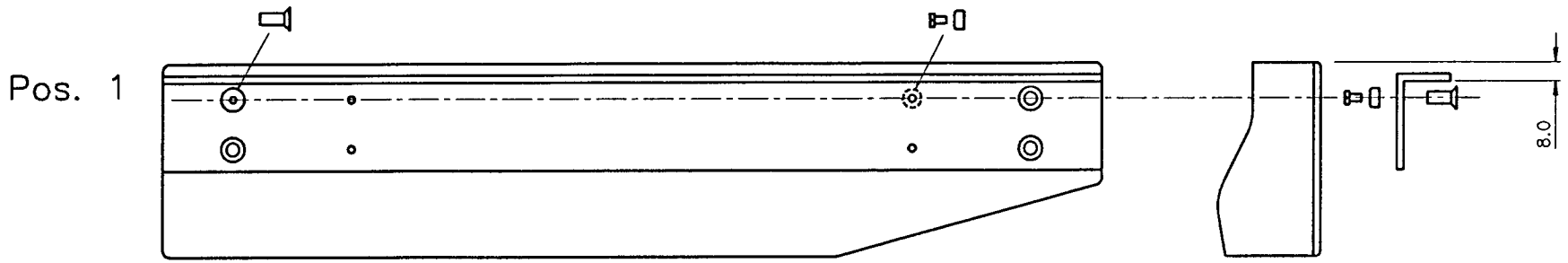

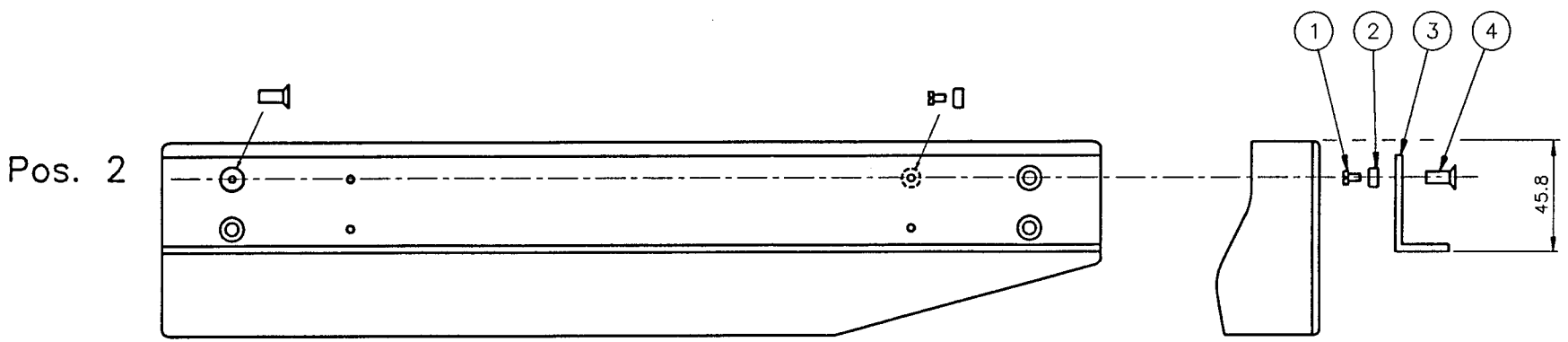

Item	Part	#	Description
1	974105	2	Screw M3x5
2	822920	2	Bushing
3	823230	2	Bracket
4	974819	2	Screw M5x10, DIN 7991
	455511		Rack kit complete

Pos. 1 Position of rack brackets for flush mounting. Tape deck surface protruding 8mm.

Pos. 2 Position of rack brackets for elevated mounting. Tape deck protruding 45.8mm

Note. The rack mount brackets are fixed with one M5 screw and guided only with a tap in the other end. Once mounted in rack the brackets are locked and stable.

Do not use the tape deck as a stabilizing part of the rack.

Do not use the rack mount brackets as carrying handles.

Nr.	Dato	Sign	Ändring
2	93.07	KS	Part list added
1	91.01	KS	Text added

Anv. FRIDA 2647i2 vinkel

Lyrec

Målst. 1:2 Tegn KS 91.01.22 Godk.

Erst.

Installation of rack kit

Mappe 2647

Ersts.

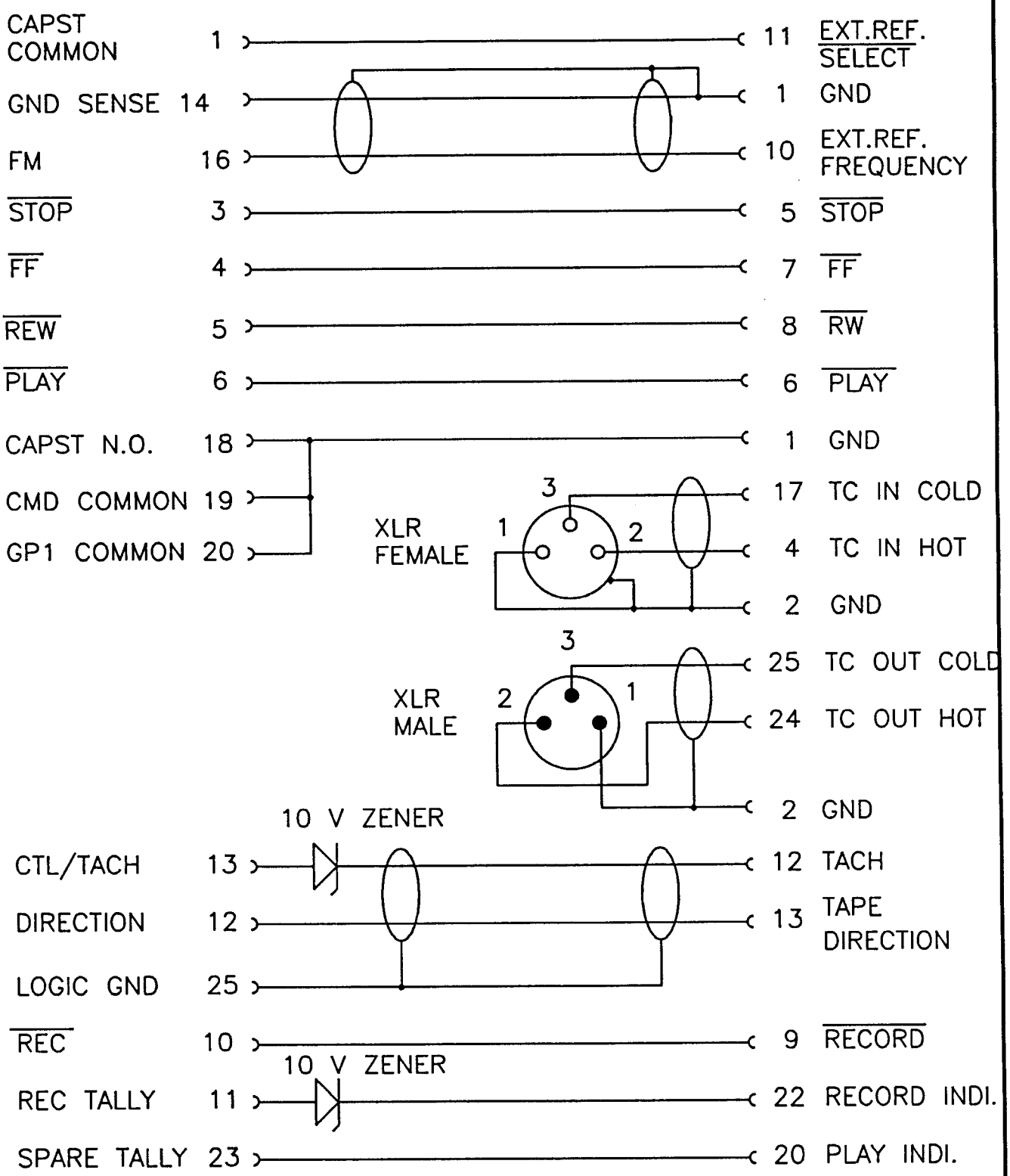

				Anv.	FRIDA		2665M1	
				Lyrec	Målst.	Tegn	RES	9102
						Godk.		
				FRIDA – ZETA 3 CABLE	Erst.			
					Mappe	2665		
1	9104	RoS	10 v zener tilf.		Ersts.			
Nr.	Dato	Sign	Ændring					

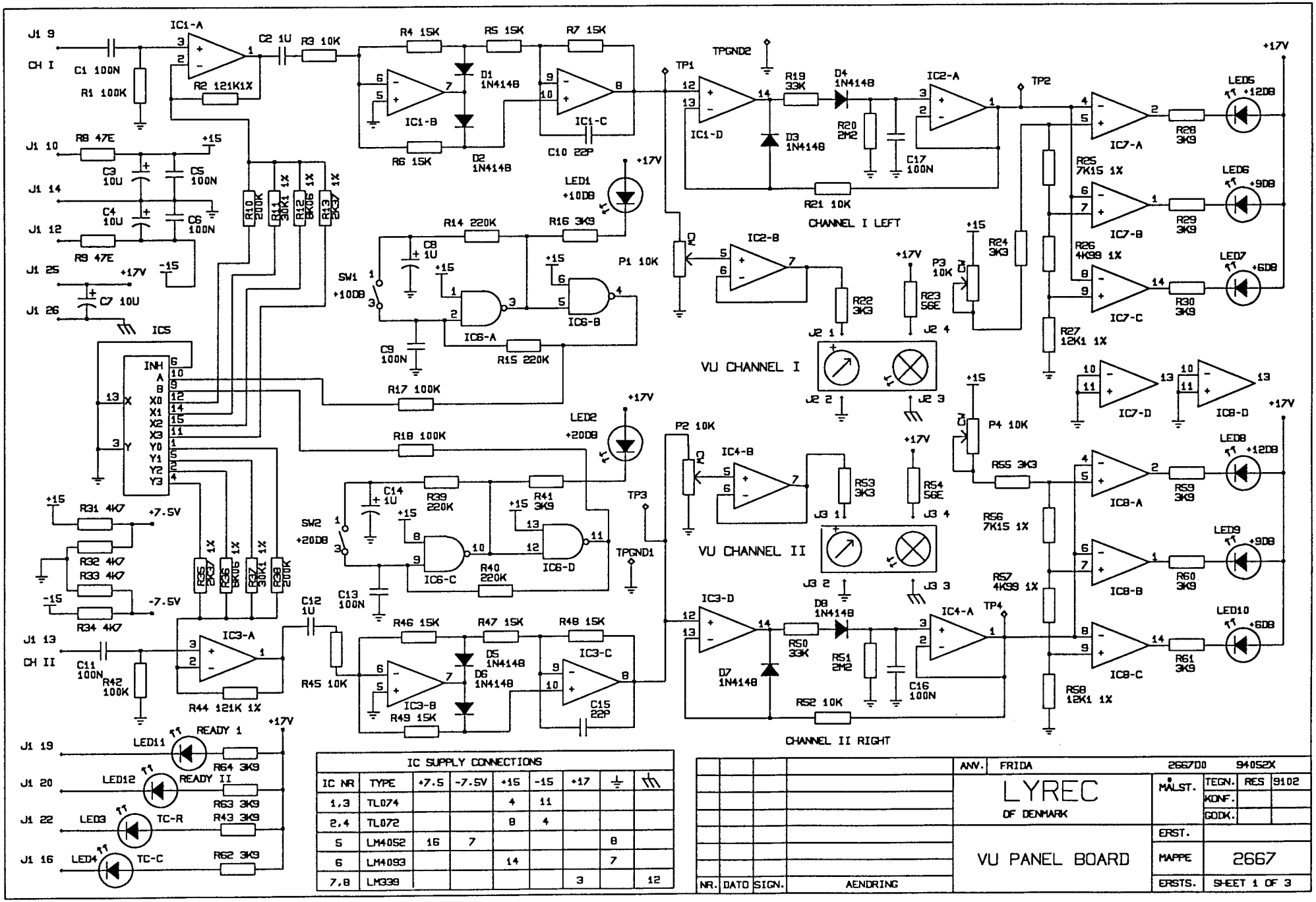

IC SUPPLY CONNECTIONS								
IC NR	TYPE	+7.5	-7.5V	+15	-15	+17	⏚	⏚
1,3	TL074			4	11			
2,4	TL072			8	4			
5	LM4052	16	7				8	
6	LM4093			14			7	
7,8	LM339					3		12

NR.	DATO	SIGN.	AENDRING

ANV. FRIDA 266700 94052X

LYREC
OF DENMARK

VU PANEL BOARD

MÅLST.	TEGN.	RES	9102
	KONF.		
	GODK.		
ERST.			
MAPPE	2667		
ERSTS.	SHEET 1 OF 3		

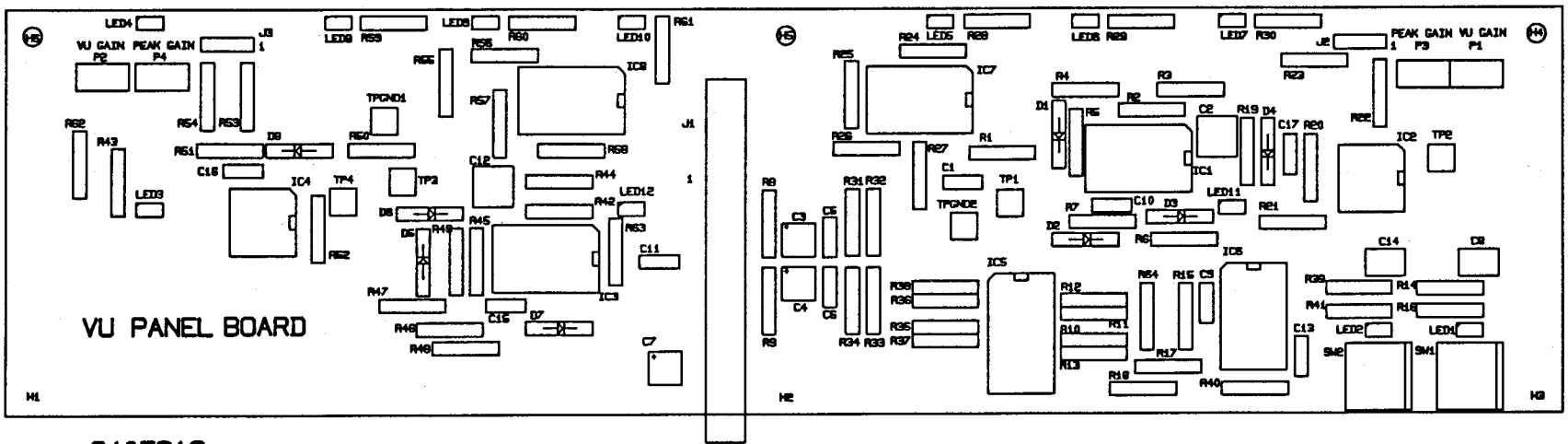

940521S

PCB 940521

				ANV.	FRIDA	2667L0		
				LYREC OF DENMARK	MÅLST.	TEGN.	RES	9102
						KONF.		
						GODK.		
				VU PANEL BOARD	ERST.			
					MAPPE	2667		
NR.	DATO	SIGN.	AENDRING		ERSTS.	SHEET 2 OF 3		

COMPONENT LIST.

R1	100K	R33	4K7	C1	100N	IC1,3	TL074
R2	121K 1%	R34	4K7	C2	1U	IC2,4	TL072
R3	10K	R35	2K37 1%	C3	10U 50V	IC5	LM4052
R4	15K	R36	8K06 1%	C4	10U 50V	IC6	LM4093
R5	15K	R37	30K1 1%	C5	100N	IC7,8	LM339
R6	15K	R38	200K	C6	100N		
R7	15K	R39	220K	C7	10U 50V		
R8	47E	R40	220K	C8	1U 35V TANT.	D1-8	1N4148
R9	47E	R41	3K9	C9	100N		
R10	200K	R42	100K	C10	22P		
R11	30K1 1%	R43	3K9	C11	100N	LED 1-12	VR3889S
R12	8K06 1%	R44	121K 1%	C12	1U		
R13	2K37 1%	R45	10K	C13	100N		
R14	220K	R46	15K	C14	1U 35V TANT.		
R15	220K	R47	15K	C15	22P	J1	26P IDC
R16	3K9	R48	15K	C16	100N	J2,3	4P BERG LIGE
R17	100K	R49	15K				
R18	100K	R50	33K	P1-4	10K SF.TX		
R19	33K	R51	2M2				
R20	2M2	R52	10K				
R21	10K	R53	3K3				
R22	3K3	R54	56E				
R23	56E	R55	3K3				
R24	3K3	R56	7K15 1%				
R25	7K15 1%	R57	4K99 1%				
R26	4K99 1%	R58	12K1 1%				
R27	12K1 1%	R59	3K9				
R28	3K9	R60	3K9				
R29	3K9	R61	3K9				
R30	3K9	R62	3K9				
R31	4K7	R63	3K9				
R32	4K7	R64	3K9				

940521	REV.0	REV.0	REV.0	-
PCB	DIAGRAM PG.1	PG.2	PG.3	PG.4
MATCHING CONFIGURATIONS				

NR.	DATO	SIGN.	AENDRING

ANV. FRIDA

LYREC
OF DENMARK

VU PANEL BOARD

2667C0

MÅLST.	TEGN.	RES	9102
	KONF.		
	GODK.		

ERST.

MAPPE 2667

ERSTS. SHEET 3 OF 3

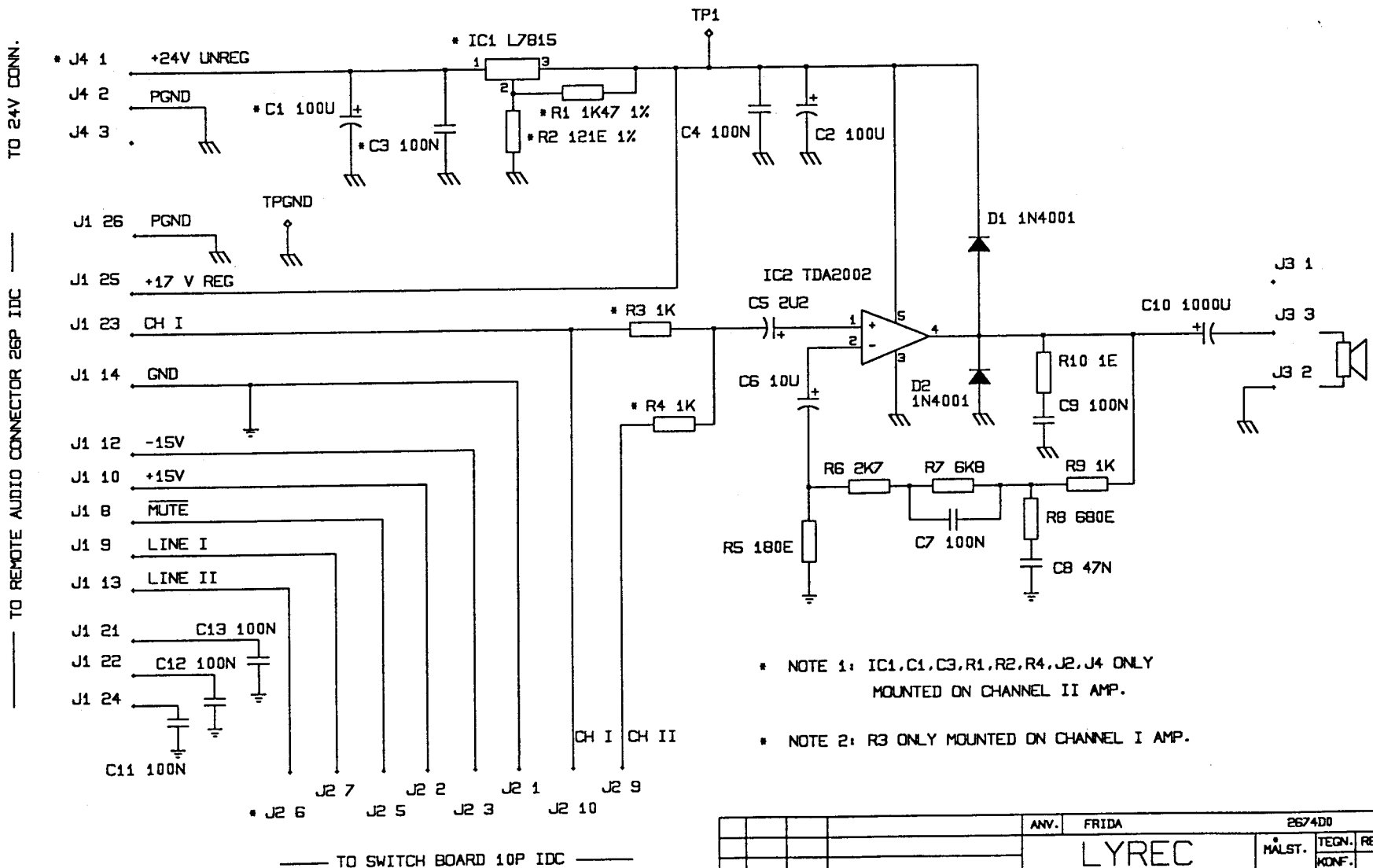

* NOTE 1: IC1,C1,C3,R1,R2,R4,J2,J4 ONLY MOUNTED ON CHANNEL II AMP.

* NOTE 2: R3 ONLY MOUNTED ON CHANNEL I AMP.

NR.	DATO	SIGN.	AENDRING	ANV.	FRIDA	2674D0		
				LYREC OF DENMARK	MÅLST.	TEGN.	RES	9102
						KONF.		
						GODK.		
				PANEL AMP	ERST.			
					MAPPE	2674		
					ERSTS.	SHEET 1 OF 3		

940540S

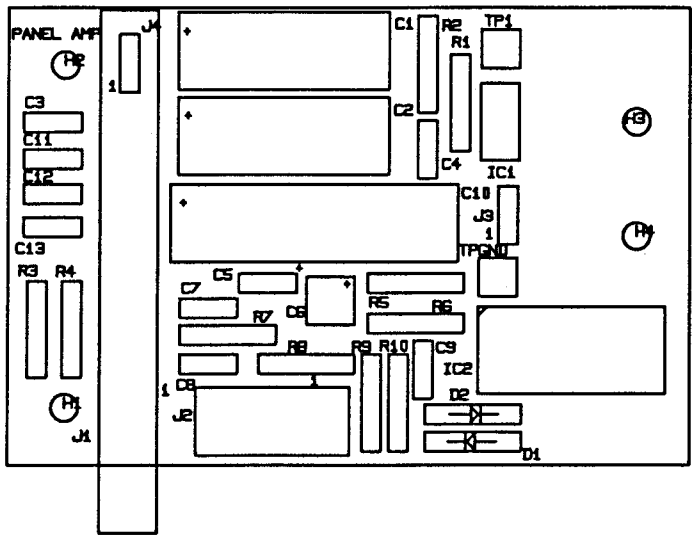

PCB 940540

				ANV.	FRIDA		2674L0	
				LYREC OF DENMARK	MÅLST.	TEGN.	RES	9102
						KONF.		
						GODK.		
				PANEL AMP	ERST.			
					MAPPE	2674		
NR.	DATO	SIGN.	AENDRING		ERSTS.	SHEET 2 OF 3		

COMPONENT LIST.

R1	1K47 1%	*	C1	100U 40V	*	D1	1N4001	IC1	L 7815 *
R2	121E 1%	*	C2	100U 40V		D2	1N4001	IC2	TDA 2002
R3	1K	*	C3	100N	*				
R4	1K	*	C4	100N					
R5	180E		C5	2U2				J1	26P IDC
R6	2K7		C6	10U 50V				J2	10P IDC *
R7	6K8		C7	100N				J3	3P BERG
R8	680E		C8	47N				J4	3P BERG *
R9	1K		C9	100N					
R10	1E 1%		C10	1000U 16V					
			C11	100N					
			C12	100N					
			C13	100N					

* NOTE 1: IC1,C1,C3,R1,R2,R4,J2,J4 ONLY MOUNTED ON CHANNEL II AMP.

* NOTE 2: R3 ONLY MOUNTED ON CHANNEL I AMP.

940540	REV.0	REV.0	REV.0	-
PCB	DIAGRAM PG.1	PG.2	PG.3	PG.4
MATCHING CONFIGURATIONS				

				ANV.	FRIDA	2674C0		
				LYREC OF DENMARK		MÅLST.	TEGN.	RES	9102
							KONF.		
							GODK.		
				PANEL AMP		ERST.			
						MAPPE	2674		
NR.	DATO	SIGN.	AENDRING			ERSTS.	SHEET 3 OF 3		

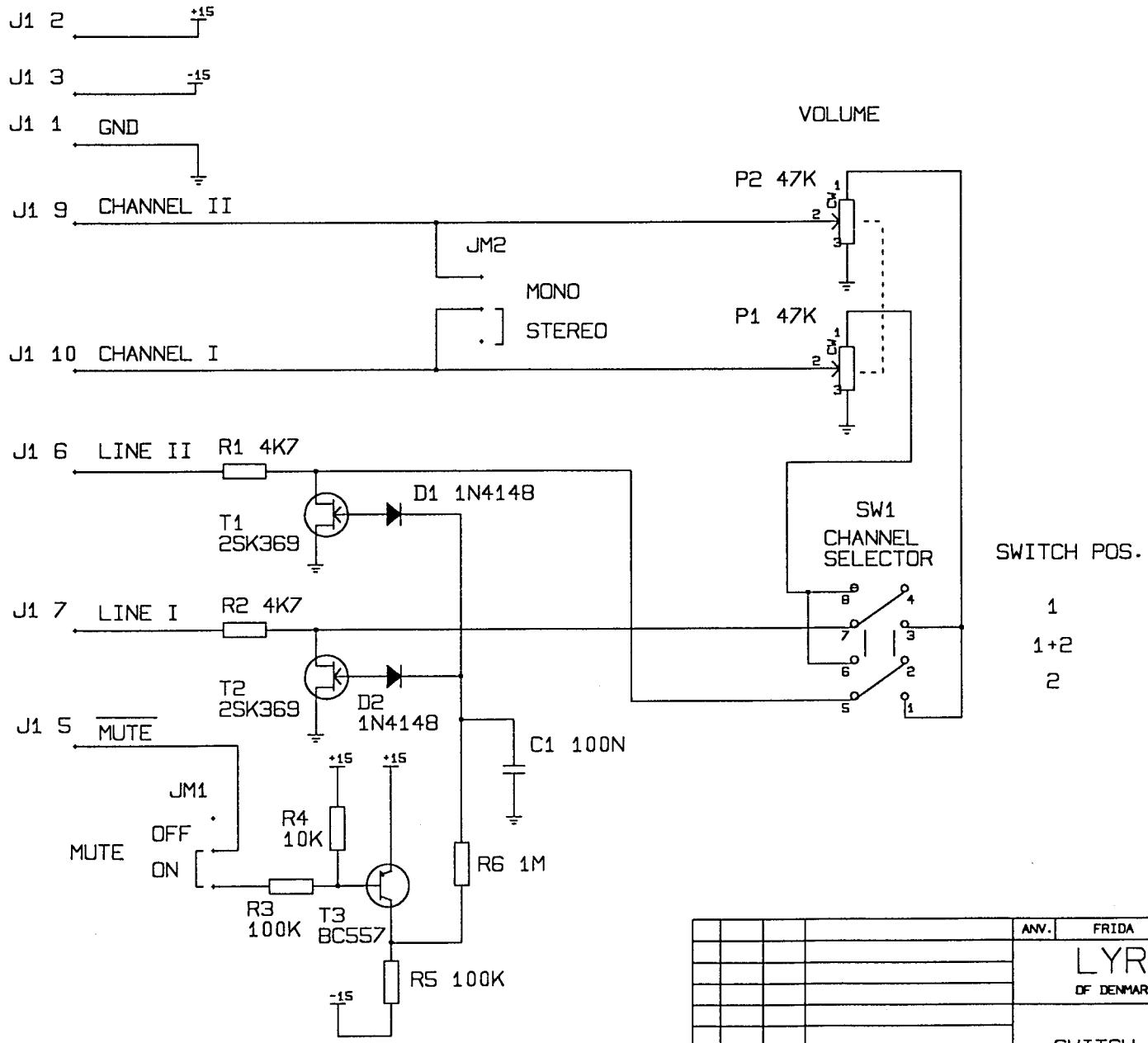

				ANV.	FRIDA	267500		
				LYREC OF DENMARK	MÅLST.	TEGN.	RES	9102
						KONF.		
						GODK.		
				SWITCH BOARD	ERST.			
					MAPPE	2675		
NR.	DATO	SIGN.	AENDRING		ERSTS.	SHEET 1 OF 3		

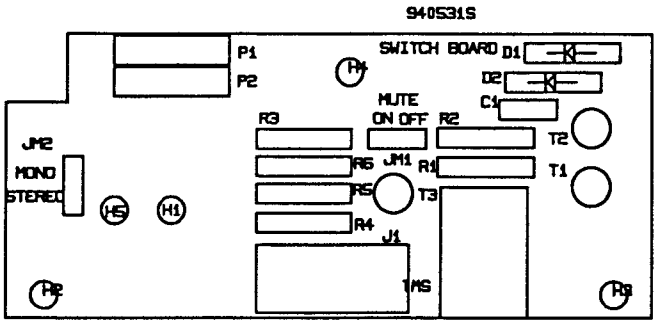

PCB 940531

				ANV.	FRIDA		2675L0	
				LYREC OF DENMARK	MÅLST.	TEGN.	RES	9102
						KONF.		
						GODK.		
				SWITCH BOARD	ERST.			
					MAPPE	2675		
NR.	DATO	SIGN.	AENDRING		ERSTS.	SHEET 2 OF 3		

COMPONENT LIST.

R1 4K7
R2 4K7
R3 100K
R4 10K
R5 100K
R6 1M

P1-2 47K STEREO LOG

C1 100N

D1 1N4148
D2 1N4148

T1 2SK369
T2 2SK369
T3 BC557

SW1 3-WAY SWITCH

J1 10P IDC CABLE

JM1 3P G09
JM2 3P G09

940531	REV.0	REV.0	REV.0	-
PCB	DIAGRAM PG.1	PG.2	PG.3	PG.4
MATCHING CONFIGURATIONS				

NR.	DATO	SIGN.	AENDRING

ANV.	FRIDA	2675C0			
LYREC OF DENMARK		MÅLST.	TEGN.	RES	9102
			KONF.		
			GODK.		
SWITCH BOARD		ERST.			
		MAPPE	2675		
		ERSTS.	SHEET 3 OF 3		

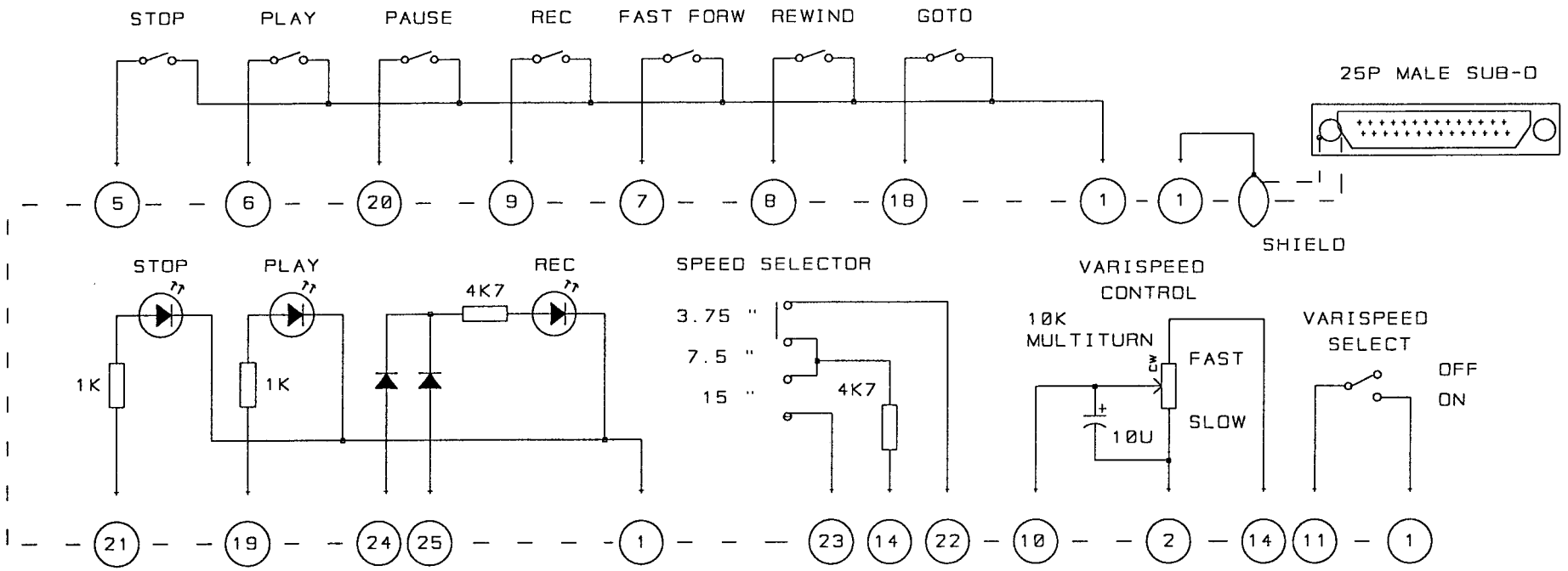

LED INDICATOR CIRCUIT.

LAMP INDICATOR CIRCUIT.

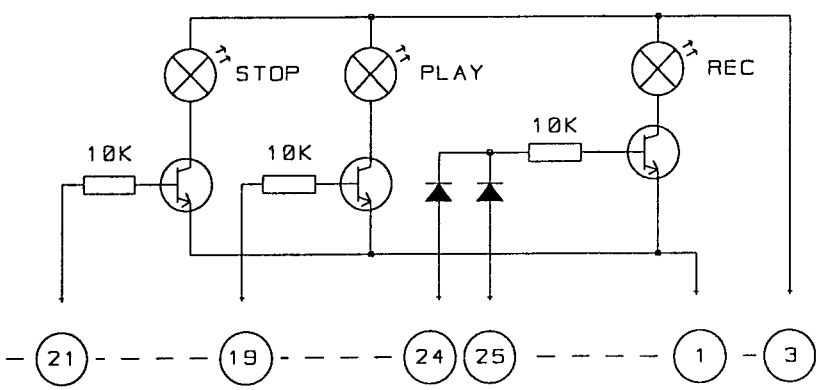

LAMP = 12V 50-100mA
TRANS. = 2N1711 OR EQ.

NOTE 1: TAPE SPEED SELECTOR ONLY FUNCTIONS CORRECTLY WHEN SELECTOR SWITCH AT FRONT PANEL IS SET TO 7.5 ips (CENTER POSITION).

NOTE 2: KEY COMMANDS ARE NOT AFFECTED BY LOCAL AND REMOTE SWITCHES AT FRONT PANEL.

NOTE 3: USE ONLY CABLE WITH SHIELD. IF RIBBON CABLE IS USED (ALL 25P CONNECTED) UP TO 10 M (30 FEET) OF CABLE IS POSSIBLE. IF NORMAL CABLE AND ONLY SHOWN CONNECTIONS ARE MADE, LENGHT UP TO 25 M (75 FEET) CAN BE USED.

NR.	DATO	SIGN.	AENDRING
1	9210	ReS	LAMP CIRCUIT ADDED

ANV.	FRIDA		272201
LYREC OF DENMARK	MALST.	TEGN.	RES 9107
		KONF.	
		GOOK.	
PARALELL WIRED REMOTE CONTROL	EAST.		
	MAPPE	2722	
	EASTS.	1 OF 1	

FRIDA MOTHERBOARD CONNECTION LIST

J1 CONNECTS TO:
MONITOR BOARD, J1

J1-1	J2-19
J1-2	J6-18
J1-3	J3-3
J1-4	J6-19
J1-5	J2-23
J1-6	J6-22
J1-7	J3-7
J1-8	J6-15
J1-9	J3-1
J1-10	IC3-2 (+15v)
J1-11	J2-17
J1-12	IC4-2 (-15v)
J1-13	J3-5
J1-14	IC3-3 IC4-1 J8-5,7 (GND)
J1-15	J2-21
J1-16	J12-15
J1-17	J6-20 J12-17
J1-18	J6-21 J12-18
J1-19	J6-16
J1-20	J6-17

J2 CONNECTS TO:
INPUT/OUTPUT BOARD, J1

J2-1	J7-3
J2-2	nc
J2-3	J7-5
J2-4	nc
J2-5	J7-7
J2-6	nc
J2-7	J7-9
J2-8	nc
J2-9	J7-11
J2-10	nc
J2-11	J7-13
J2-12	nc
J2-13	J7-15
J2-14	nc
J2-15	J7-17
J2-16	nc
J2-17	J1-11
J2-18	nc
J2-19	J1-1
J2-20	nc
J2-21	J1-15
J2-22	nc
J2-23	J1-5
J2-24	IC3-2 (+15V)
J2-25	IC3-3 IC4-1 J8-5,7 (GND)
J2-26	IC3-3 IC4-1 J8-5,7 (GND)
J2-27	IC4-2 (-15V)

J3 CONNECTS TO:
AUDIO BOARD, J1

J3-1	J1-9
J3-2	nc
J3-3	J1-3
J3-4	nc
J3-5	J1-13
J3-6	nc
J3-7	J1-7
J3-8	IC3-2 (+15V)
J3-9	IC3-3 IC4-1 J8-5,7 (GND)
J3-10	nc
J3-11	IC4-2 (-15V)
J3-12	nc
J3-13	nc
J3-14	J6-27 J9-20 J14-9 J15-26 J16-16
J3-15	J6-26 J9-18 J14-10 J15-27 J16-15
J3-16	J6-1
J3-17	J6-2
J3-18	J6-3
J3-19	J6-4
J3-20	J6-5
J3-21	J6-6
J3-22	J6-7 J9-22
J3-23	J6-8 J9-24
J3-24	J6-9
J3-25	J6-11
J3-26	J6-10
J3-27	J6-12
J3-28	J6-13 J12-14
J3-29	J6-14

J4 CONNECTS TO:
MOTOR POWER AMP (SUPPLY), J1

J4-1	IC1-2 (+15V)
J4-2	nc
J4-3	IC2-2 (-15V)
J4-4	J4-5 J13-10
J4-5	J4-4 J13-10
J4-6	J13-13
J4-7	J11-7 J13-9
J4-8	J13-5
J4-9	J11-9 J13-14
J4-10	nc

J5 CONNECTS TO:
TAPE TIMER, J1

J5-1	J13-21
J5-2	IC1-2 (+15V)
J5-3	J8-12 (+5V)
J5-4	IC2-2 (-15V)
J5-5	J9-25
J5-6	J13-11 J15-13
J5-7	IC1-3 IC2-1 J8-4,6 (GND)
J5-8	J10-23 J13-8 J15-9
J5-9	IC1-3 IC2-1 J8-4,6 (GND)
J5-10	J15-10

J6 CONNECTS TO:
AUDIO LOGIC/DRIVER BOARD, J1

J6-1	J3-16
J6-2	J3-17
J6-3	J3-18
J6-4	J3-19
J6-5	J3-20
J6-6	J3-21
J6-7	J3-22 J9-22
J6-8	J3-23 J9-24
J6-9	J3-24
J6-10	J3-25
J6-11	J3-26
J6-12	J3-27
J6-13	J3-28 J12-14
J6-14	J3-29
J6-15	J1-8
J6-16	J1-19
J6-17	J1-20
J6-18	J1-2
J6-19	J1-4
J6-20	J1-17 J12-17
J6-21	J1-18 J12-18
J6-22	J1-6
J6-23	J14-14
J6-24	J13-15 J15-16
J6-25	J13-16 J15-17
J6-26	J3-15 J9-18 J14-10 J15-27 J16-15
J6-27	J3-14 J9-20 J14-9 J15-26 J16-16
J6-28	J12-19 J13-23 J15-14
J6-29	J12-20 J13-22 J15-15
J6-30	J10-18 J12-13 J15-5
J6-31	J15-6
J6-32	IC3-2 (+15V)
J6-33	IC3-3 IC4-1 J8-5,7 (GND)
J6-34	IC4-2 (-15V)
J6-35	nc
J6-36	IC2-2 (-15V)
J6-37	IC1-3 IC2-1 J8-4,6 (GND)
J6-38	IC1-2 (+15V)
J6-39	J8-8 (GND)
J6-40	J8-13 (+24V)

J7 CONNECTS TO:
XLR BOARD, J1

J7-1	IC3-3 IC4-1 J8-5,7 (GND)
J7-2	IC3-3 IC4-1 J8-5,7 (GND)
J7-3	J2-1
J7-4	IC3-3 IC4-1 J8-5,7 (GND)
J7-5	J2-3
J7-6	IC3-3 IC4-1 J8-5,7 (GND)
J7-7	J2-5
J7-8	IC3-3 IC4-1 J8-5,7 (GND)
J7-9	J2-7
J7-10	IC3-3 IC4-1 J8-5,7 (GND)
J7-11	J2-9
J7-12	IC3-3 IC4-1 J8-5,7 (GND)
J7-13	J2-11
J7-14	IC3-3 IC4-1 J8-5,7 (GND)
J7-15	J2-13
J7-16	IC3-3 IC4-1 J8-5,7 (GND)
J7-17	J2-15
J7-18	IC3-3 IC4-1 J8-5,7 (GND)
J7-19	IC3-3 IC4-1 J8-5,7 (GND)
J7-20	IC3-3 IC4-1 J8-5,7 (GND)

J8 CONNECTS TO:
PSU BOARD, J1

J8-1	nc
J8-2	IC3-1 (+21V U.REG)
J8-3	IC1-1 (+21V U.REG)
J8-4	IC1-3 IC2-1 (LOGIC GND)
J8-5	IC3-3 IC4-1 (ANALOG GND)
J8-6	IC1-3 IC2-1 (LOGIC GND)
J8-7	IC3-3 IC4-1 (ANALOG GND)
J8-8	J6-39 J14-2 J15-3 J15-11 J16-1 J16-2 (POWER GND)
J8-9	IC4-3 (-21V U.REG)
J8-10	IC2-3 (-21V U.REG)
J8-11	J9-5 J10-5 J15-1 J16-3 (+10V U.REG)
J8-12	J5-3 J9-6 J10-6 J12-4 (+5V REG.)
J8-13	J6-40 J14-4 (+24V REG.)

J9 CONNECTS TO:
REMOTE CONNECTOR

J9-1	IC1-3 IC2-1 J8-4,6 (GND)
J9-2	IC1-2 (+15V)
J9-3	IC1-3 IC2-1 J8-4,6 (GND)
J9-4	IC2-2 (-15V)
J9-5	J8-11 (+10V)
J9-6	J8-12 (+5V)
J9-7	J15-18
J9-8	J15-19
J9-9	J10-9 J16-13
J9-10	J16-7
J9-11	J10-11 J16-10
J9-12	J10-14 J15-22
J9-13	J10-13 J16-11
J9-14	J16-8
J9-15	J10-15 J16-12

J9-16	J10-16 J15-21
J9-17	J10-17 J16-9
J9-18	J3-15 J6-26 J14-10 J15-27 J16-15
J9-19	J14-5
J9-20	J3-14 J6-27 J14-9 J15-26 J16-16
J9-21	J14-6
J9-22	J3-22 J6-7
J9-23	J16-14
J9-24	J3-23 J6-8
J9-25	J5-5
J9-26	nc

J10 CONNECTS TO:
SYNCRO CONNECTOR

J10-1	IC1-3 IC2-1 J8-4,6 (GND)
J10-2	IC1-2 (+15V)
J10-3	IC1-3 IC2-1 J8-4,6 (GND)
J10-4	IC2-2 (-15V)
J10-5	J8-11 (+10V)
J10-6	J8-12 (+5V)
J10-7	J12-5
J10-8	J12-6
J10-9	J9-9 J16-13
J10-10	J15-23
J10-11	J9-11 J16-10
J10-12	J15-24
J10-13	J9-13 J16-11
J10-14	J15-22 J9-12
J10-15	J9-15 J16-12
J10-16	J9-16 J15-21
J10-17	J9-17 J16-9
J10-18	J6-30 J12-13 J15-5
J10-19	J14-7
J10-20	nc
J10-21	J14-8
J10-22	J12-8
J10-23	J5-8 J13-8 J15-9
J10-24	J12-9
J10-25	J13-24 J15-20
J10-26	nc

J11 CONNECTS TO:
MOTOR POWER AMP (TAKE UP), J1

J11-1	IC1-2 (+15V)
J11-2	nc
J11-3	IC2-2 (-15V)
J11-4	J11-5 J13-20 J15-25
J11-5	J11-4 J13-20 J15-25
J11-6	J13-12
J11-7	J4-7 J13-9
J11-8	J13-4
J11-9	J4-9 J13-14
J11-10	nc

J12 CONNECTS TO:
TIME CODE BOARD, J1

J12-1	IC1-2 (+15V)
J12-2	IC1-3 IC2-1 J8-4,6 (GND)
J12-3	IC2-2 (-15V)
J12-4	J8-12 (+5V)
J12-5	J10-7
J12-6	J10-8
J12-7	IC1-3 IC2-1 J8-4,6 (GND)
J12-8	J10-22
J12-9	J10-24
J12-10	J16-18
J12-11	J16-17
J12-12	J6-31 J15-6
J12-13	J6-30 J10-18 J15-5
J12-14	J3-28 J6-13
J12-15	J1-16
J12-16	nc
J12-17	J1-17 J6-20
J12-18	J1-18 J6-21
J12-19	J6-28 J13-23 J15-14
J12-20	J6-29 J13-22 J15-15

J13 CONNECTS TO:
TAPE SERVO CONTROL, J1

J13-1	IC1-2 (+15V)
J13-2	IC1-3 IC2-1 J8-4,6 (GND)
J13-3	IC2-2 (-15V)
J13-4	J11-8
J13-5	J4-8
J13-6	J15-7
J13-7	J15-8
J13-8	J5-8 J10-23 J15-9
J13-9	J4-7 J11-7
J13-10	J4-4 J4-5
J13-11	J5-6 J15-13
J13-12	J11-6
J13-13	J4-6
J13-14	J4-9 J11-9
J13-15	J6-24 J15-16
J13-16	J6-25 J15-17
J13-17	J16-4
J13-18	J16-5
J13-19	J16-6
J13-20	J11-4 J11-5 J15-25
J13-21	J5-1
J13-22	J6-29 J12-20 J15-15
J13-23	J6-28 J12-19 J15-14
J13-24	J10-25 J15-20

J14 CONNECTS TO:
CAPSTAN SERVO, J1

J14-1	IC1-2 (+15V)
J14-2	J8-8 (GND)
J14-3	IC2-2 (-15V)
J14-4	J8-13 (+24V)
J14-5	J9-19
J14-6	J9-21
J14-7	J10-19
J14-8	J10-21
J14-9	J3-14 J6-27 J9-20 J15-26 J16-16
J14-10	J3-15 J6-26 J9-18 J15-27 J16-15
J14-11	J15-12

J14-12	nc
J14-13	nc
J14-14	J6-23

J15 CONNECTS TO:
LOGIC BOARD, J1

J15-1	J8-11 (+10V)
J15-2	IC1-2 (+15V)
J15-3	J8-8 (GND)
J15-4	nc
J15-5	J6-30 J10-18 J12-13
J15-6	J6-31 J12-12
J15-7	J13-6
J15-8	J13-7
J15-9	J5-8 J10-23 J13-8
J15-10	J5-10
J15-11	J8-8 (GND)
J15-12	J14-11
J15-13	J5-6 J13-11
J15-14	J6-28 J12-19 J13-23
J15-15	J6-29 J12-20 J13-22
J15-16	J6-24 J13-15
J15-17	J6-25 J13-16
J15-18	J9-7
J15-19	J9-8
J15-20	J10-25 J13-24
J15-21	J9-16 J10-16
J15-22	J10-14
J15-23	J10-10
J15-24	J10-12
J15-25	J11-4 J11-5 J13-20
J15-26	J3-14 J6-27 J9-20 J14-9 J16-16
J15-27	J3-15 J6-26 J9-18 J14-10 J16-15
J15-28	J16-19
J15-29	J16-20

J16 CONNECTS TO:
FRONT PANEL BOARD, J1

J16-1	J8-8 (GND)
J16-2	J8-8 (GND)
J16-3	J8-11 (+10V)
J16-4	J13-17
J16-5	J13-18
J16-6	J13-19
J16-7	J9-10
J16-8	J9-14
J16-9	J9-17 J10-17
J16-10	J9-11 J10-11
J16-11	J9-13 J10-13
J16-12	J9-15 J10-15
J16-13	J9-9 J10-9
J16-14	J9-23
J16-15	J3-15 J6-26 J9-18 J14-10 J15-27
J16-16	J3-14 J6-27 J9-20 J14-9 J15-26
J16-17	J12-11
J16-18	J12-10
J16-19	J15-28
J16-20	J15-29

J17 CONNECTS TO:
PANEL AMP, J4

J17-1	J8-13 (+24V)
J17-2	IC1-3 IC2-1 J8-4,6 (GND)

NOTE 1: POWER SUPPLY CONNECTIONS FOR CONNECTORS ONLY SHOWN FOR FINAL DESTINATION, I.E. REGULATOR IC'S OR J8 (PSU CONNECTOR).

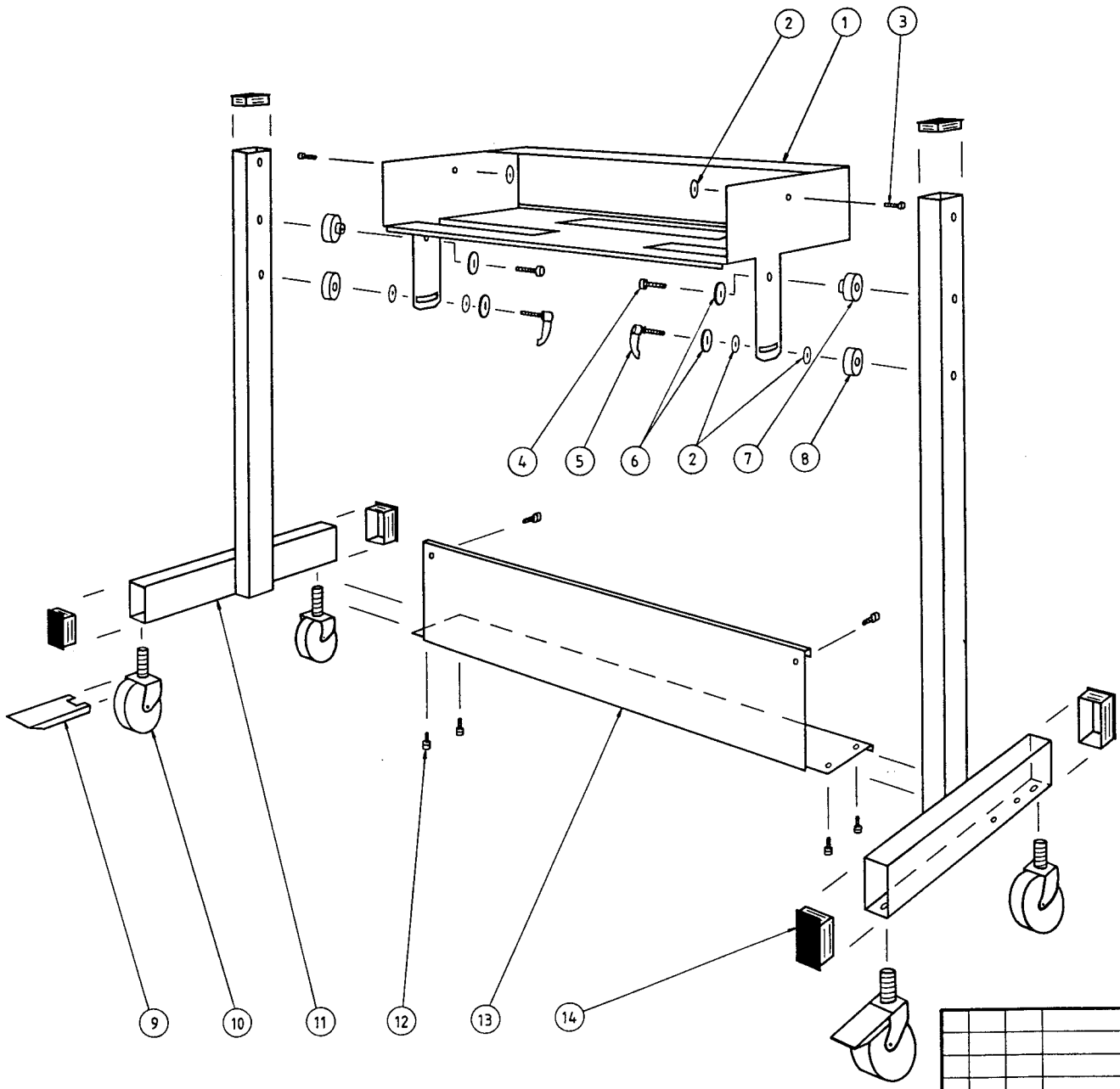

Item	Part		Description
1	826540	1	Tray
2	970241	6	Washer, nylon M6×0,5
3	974820	2	Screw, hex M5×16 DIN912
4	974841	2	Screw, hex M6×30 DIN7984
5	961432	2	Locking handle M6×25
6	970134	4	Washer 1/4
7	826680	2	Bushing ø6/ø10/ø20×3/2,5
8	826560	2	Spacer ø6/ø20×2,5
9	960205	2	Brake for castor
10	960203	4	Castor 75mm. M10, grey
11	827010	2	Side bar
12	974901	6	Screw, taptite M5×10
13	826550	1	Support plate
14	961006	6	End cap DPFR 60 30, black
	453001		Floorstand complete

Nr.	Dato	Sign.	Ændring
2	93.03.	KS	2 stk. huller 5×9 fjernet fra pos. 13
1	9301	KS	Pos.2 flyttet

ANV. FRIDA

Lyrec

Floorstand.

Målst.	Tegn.	KS.NB	92.07.
	Konf.		
	Godk.		
Erst.			
Mappe	2903		
Ersts.			

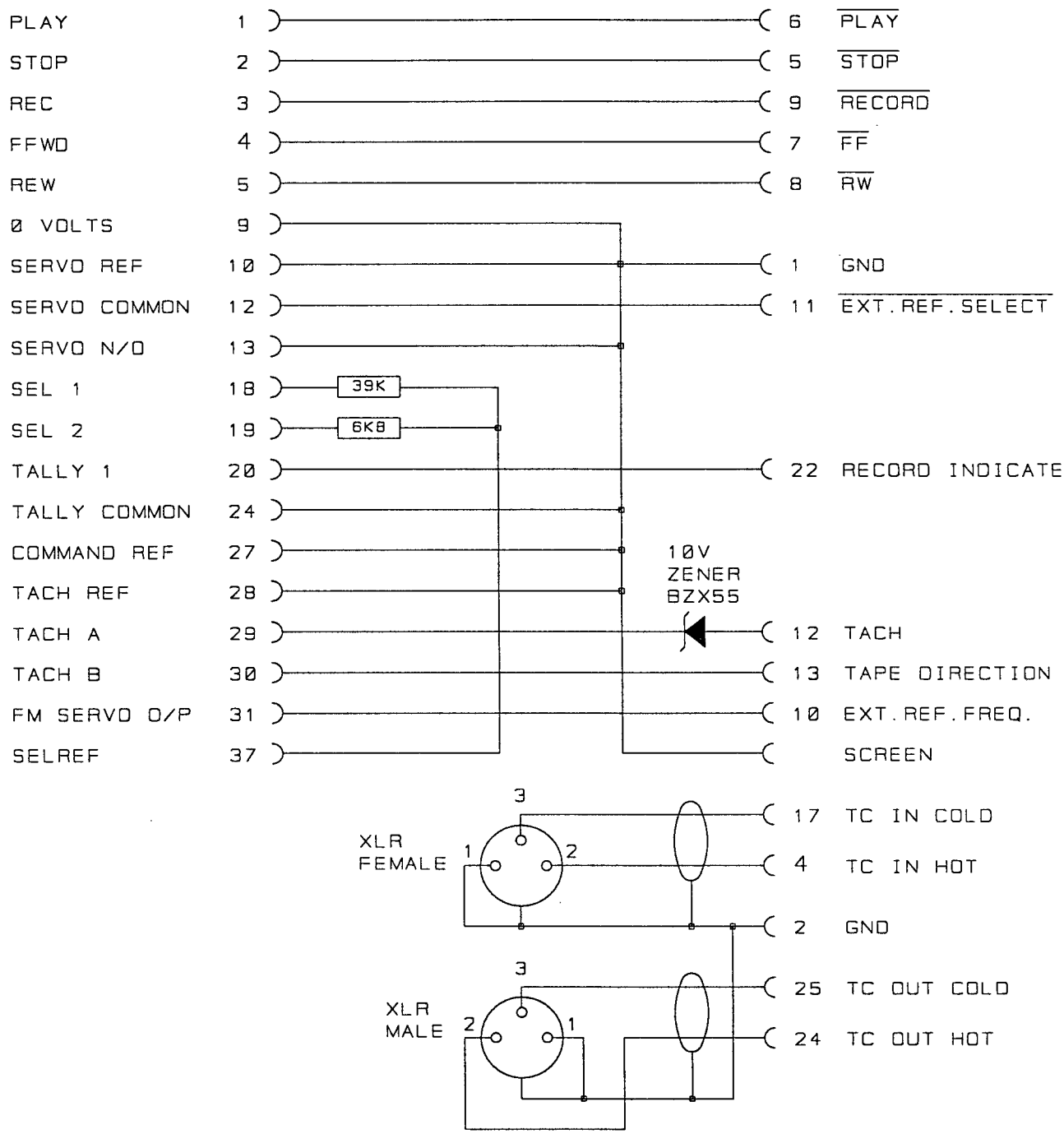

				ANV.	FRIDA	305600		
				LYREC OF DENMARK		* MALST.	TEGN.	JHE	9211
							KONF.		
							GODK.		
				FRIDA - ES1-11 CABLE		ERST.		
						MAPPE	3056	
NR.	DATO	SIGN.	AENDRING			ERSTS.		

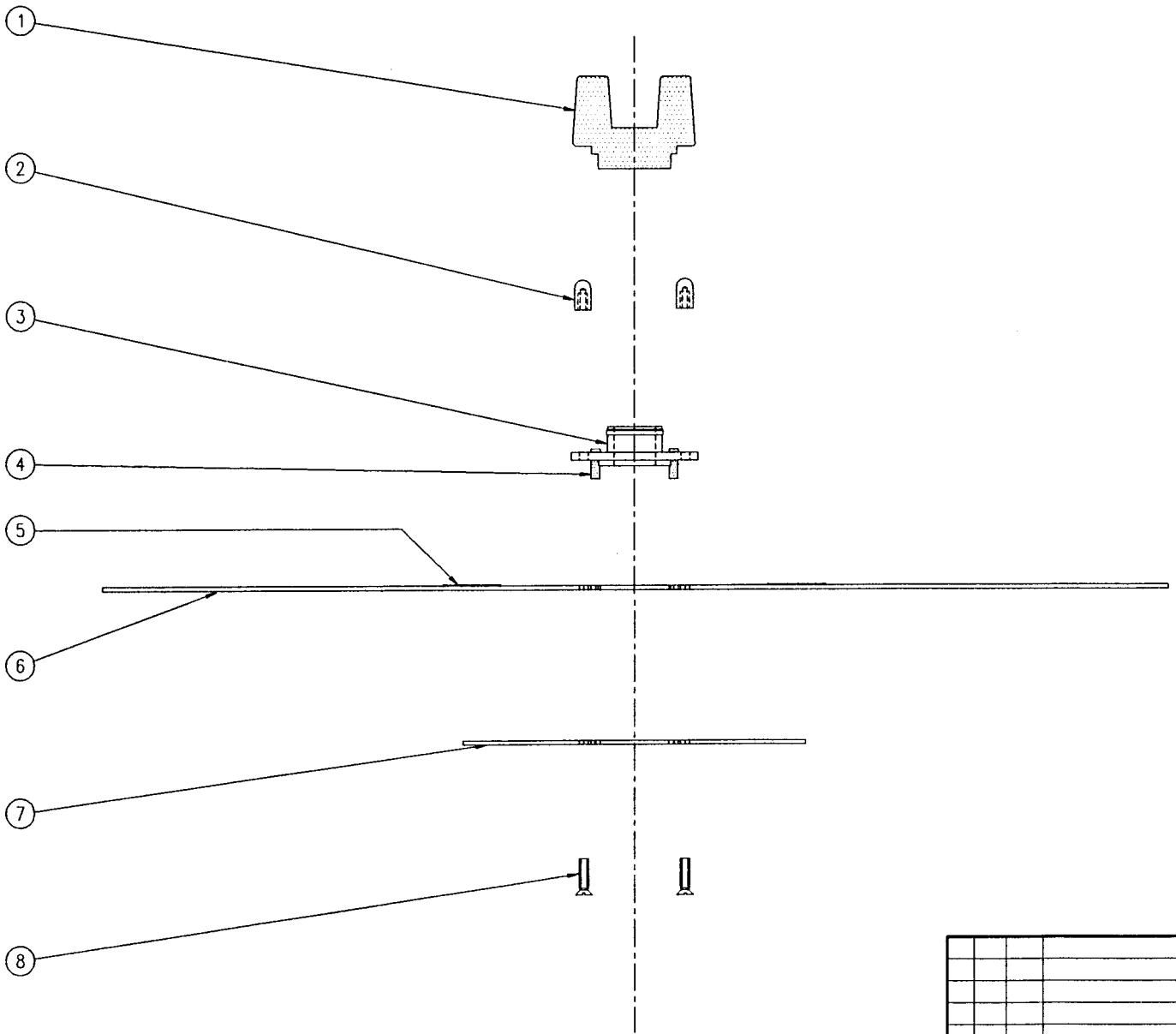

Item	Part	#	Description
1	824460	1	Lock handle
2	824450	4	Lock pin with thread
3	824440	1	Base
4	970434	2	Lock pin 2.5 x 8
5	831880	6	Friction pad ø16mm
6	824420	1	Plate ø295mm
altern.	825740	1	Plate ø282mm
altern.	824730	1	Plate ø270mm
7	824430	1	Plate ø95mm
8	974533	4	Screw 2.5 x 8
	501164	for ø295mm	
	501187	for ø270mm	
	501188	for ø282mm	

Top view:

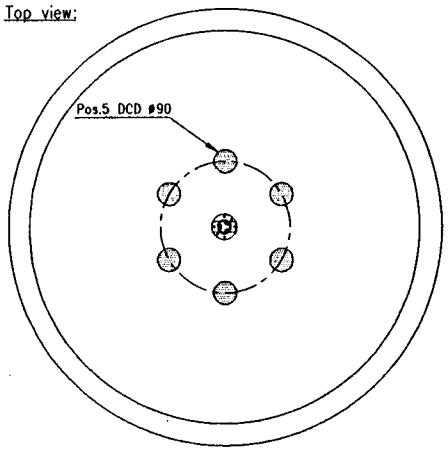

Nr.	Dato	Sign	Ændring
1	93.05	KS	6stk. f.pad (pos.5) tilf.

Anv. FRED & FRIDA 3125m1

Lyrec

Målst. ~ | Tegn KH.NB 93.03 | Godk.

AEG Adaptor
w. flange.

Erst.
Mappe 3125
Ersta.

Itm.	Part	Description
1	898880	Screw M4x35, DIN912
2	898870	Spring
3	815000	Cine center, upper part
4	815010	Cine center, lower part
5	824620	Rubber pad
6	974625	Screw M3x8
7	822130	Reel platform
8	816400	Screw M4x5, DIN84
1-8	501230	Reel platform assembly

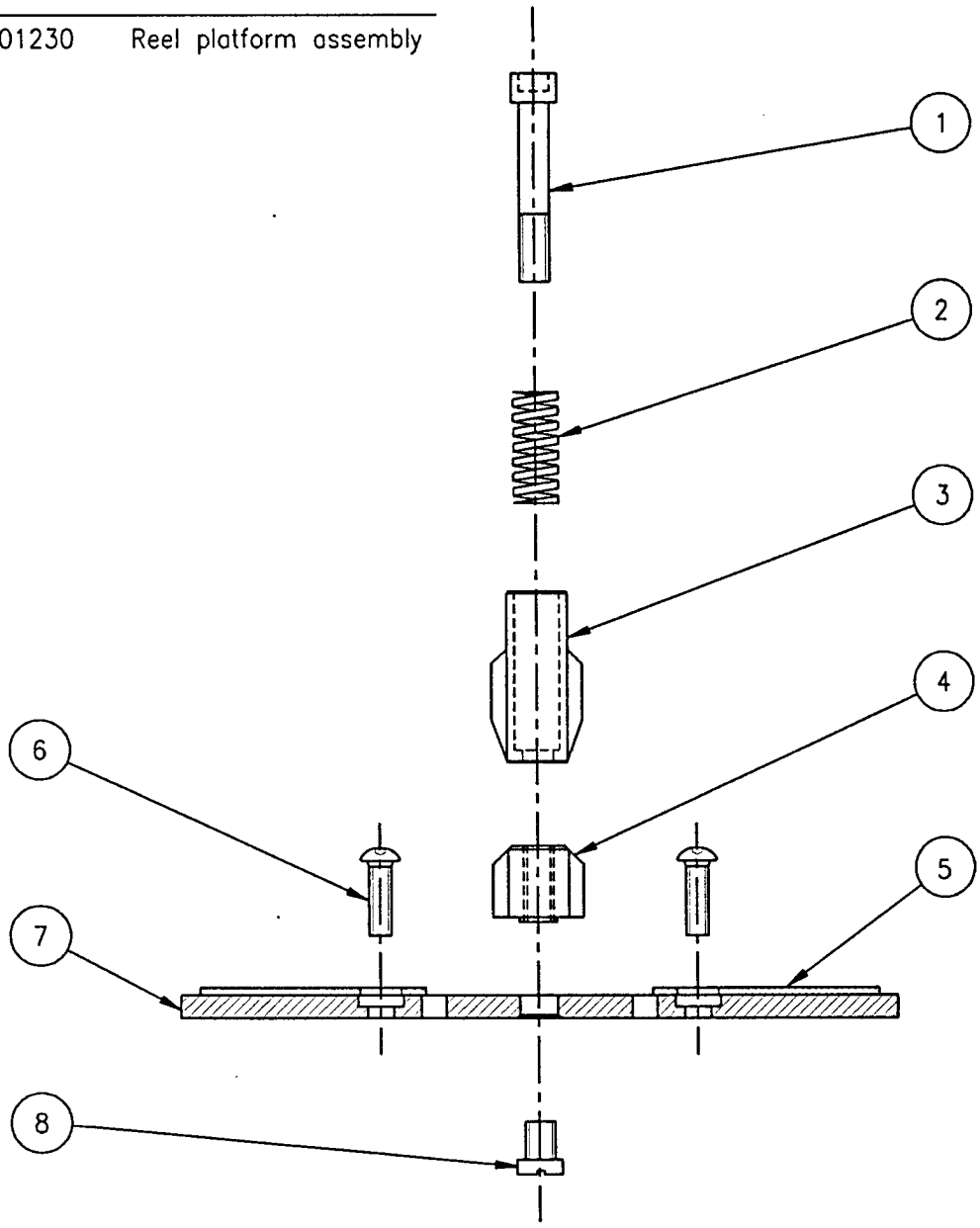

Nr.	Dato	Sign	Ændring

Anv. FRIDA 3247m0 ikke målfast

Lyrec

Målst. ~ | Tegn JvS.NB 94.01 | Godk.

Reel platform for FRIDA

Erst.

Mappe 3247

Ersts.

A APPENDIX

The Frida logic control system.

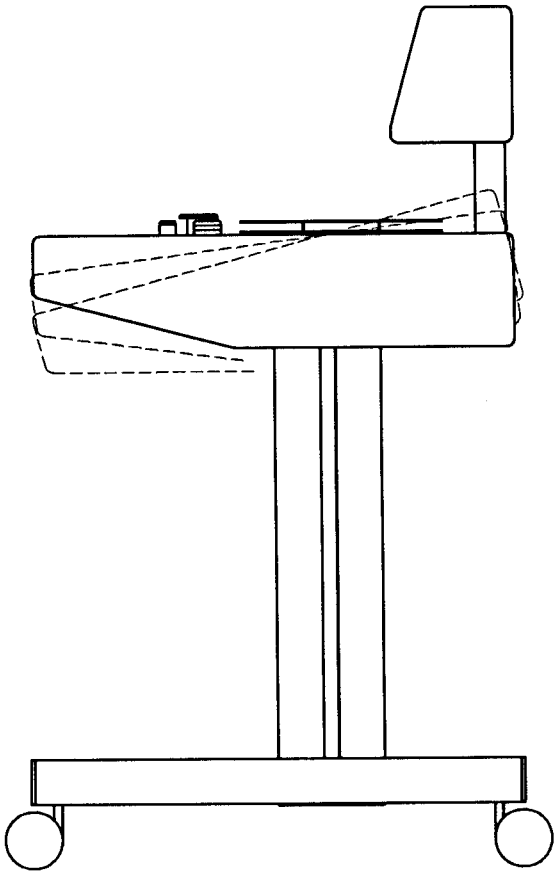

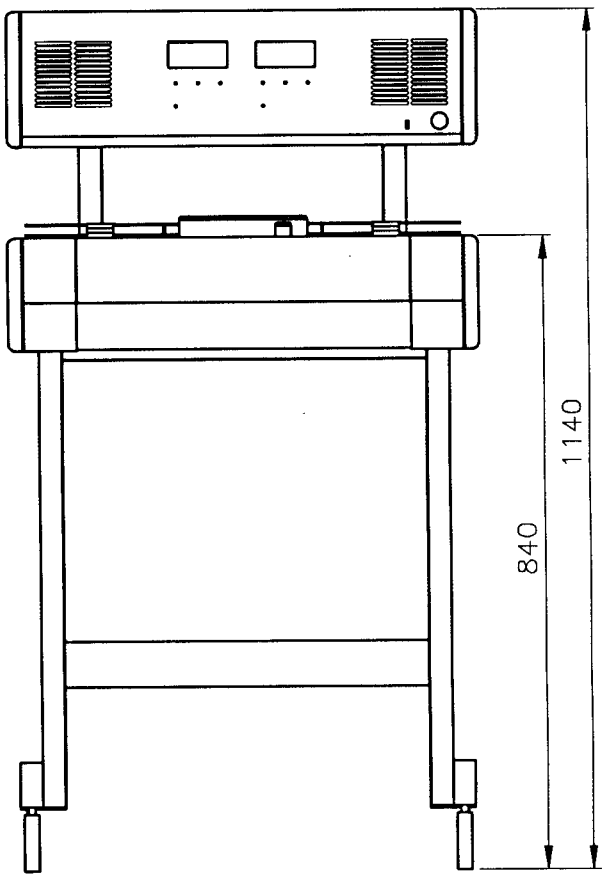

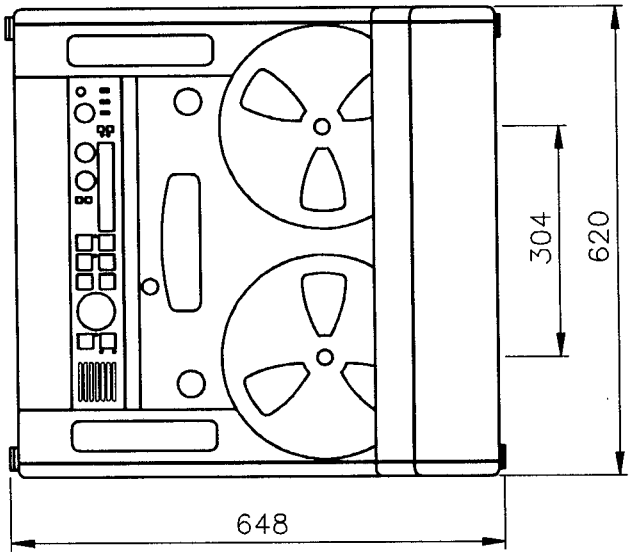

				Anv.	FRIDA	konsol1		
				Lyrec OF DENMARK		Målst. 1:10	Tegn	KS	910111
							Godk.		
				Console with VU meters and 2 speakers		Erst.		
						Mappe		
1	91.01	KS						
Nr.	Dato	Sign	Ændring			Ersts.		

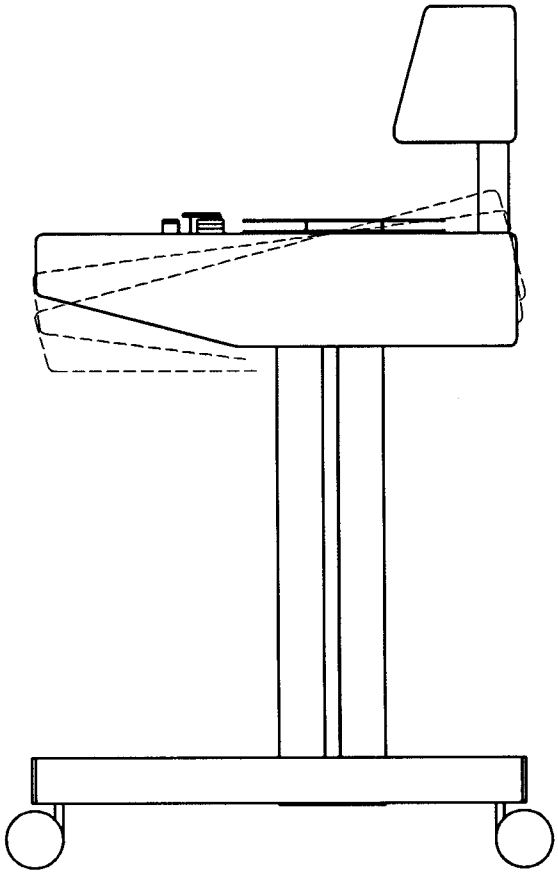

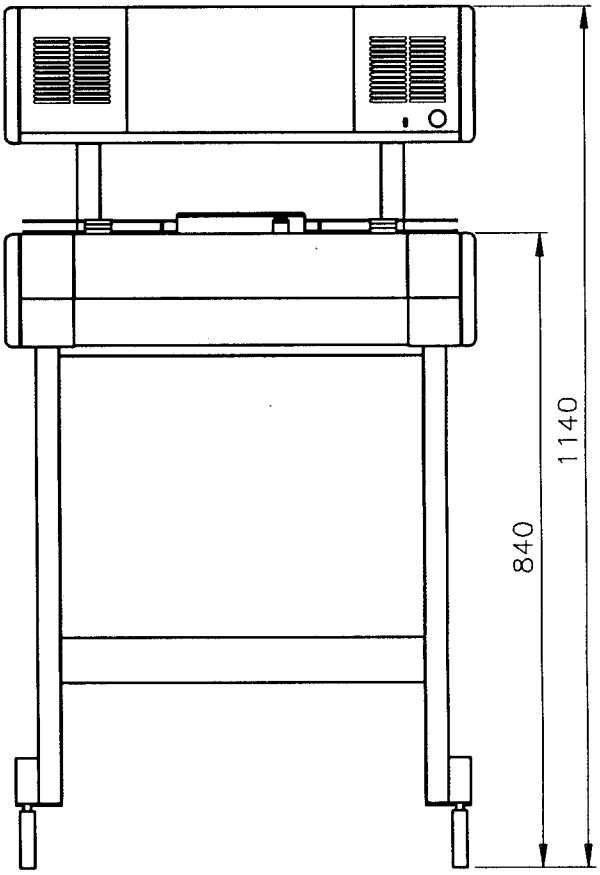

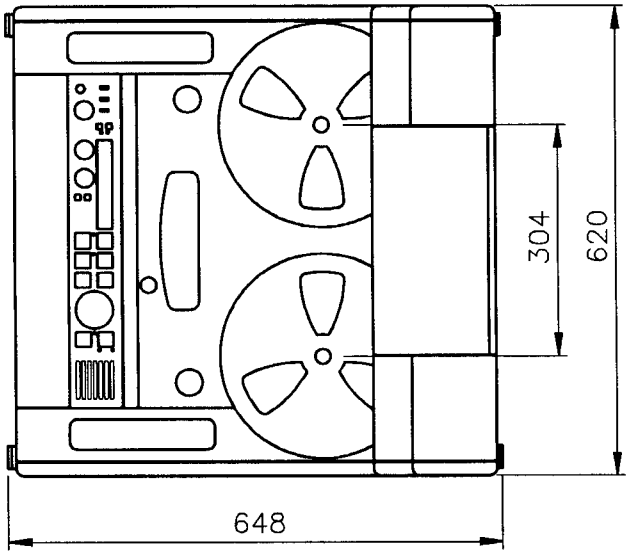

				Anv.	FRIDA	konsol2		
				Lyrec OF DENMARK		Målst. 1:10	Tegn	KS	910212
							Godk.		
				Console with 2 speakers and shelf		Erst.		
						Mappe		
Nr.	Dato	Sign	Ændring			Ersts.		

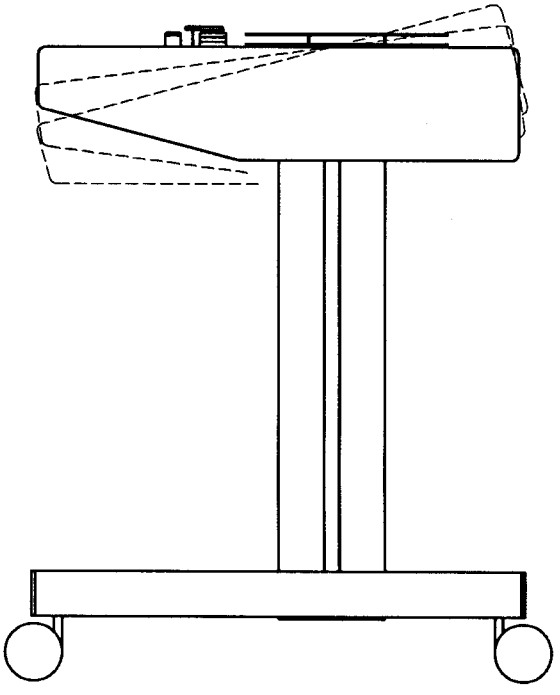

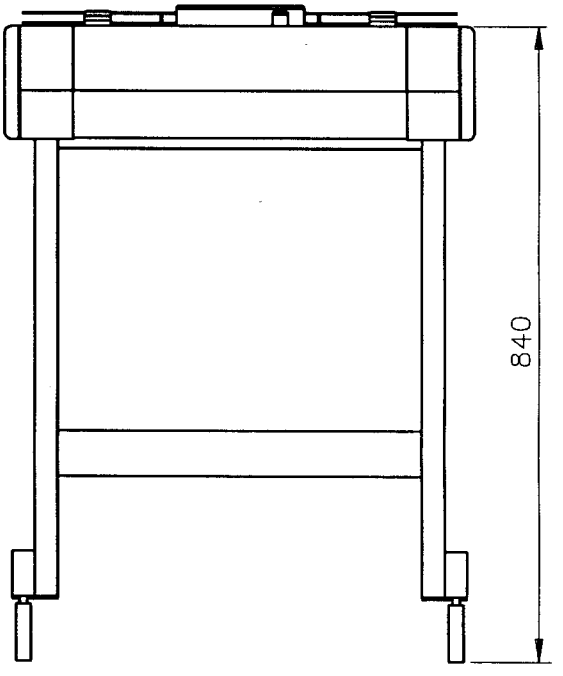

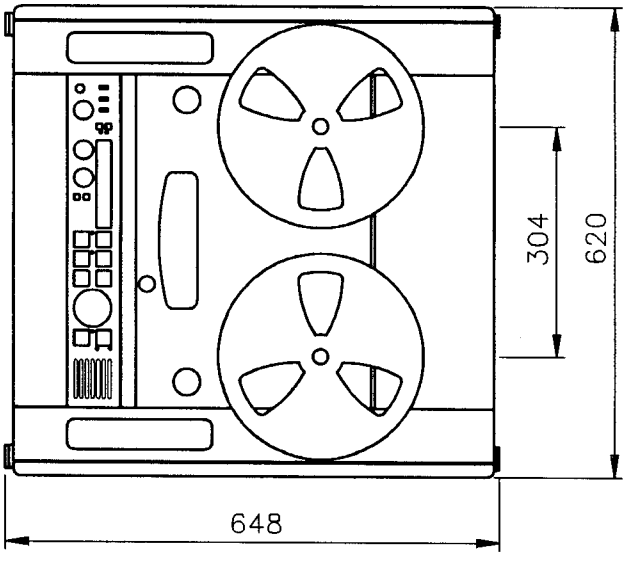

				Anv.	FRIDA	konsol3		
				Lyrec OF DENMARK		Målst. 1:10	Tegn	KS	910212
							Godk.		
				Console		Erst.		
						Mappe		
						Ersts.		
Nr.	Dato	Sign	Ændring					

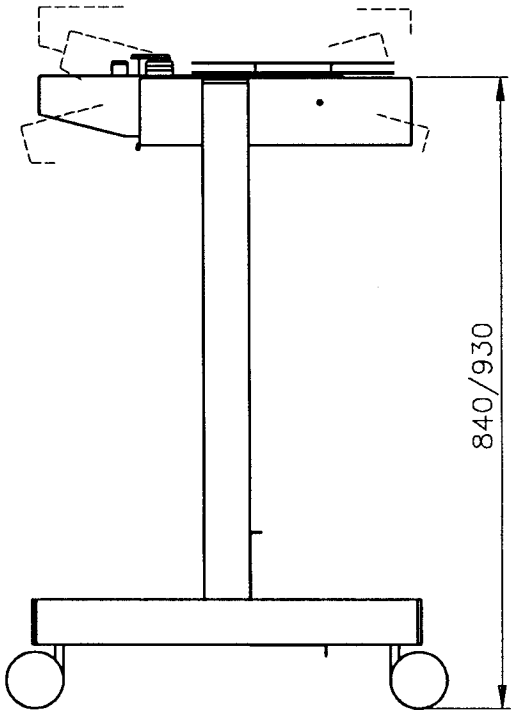

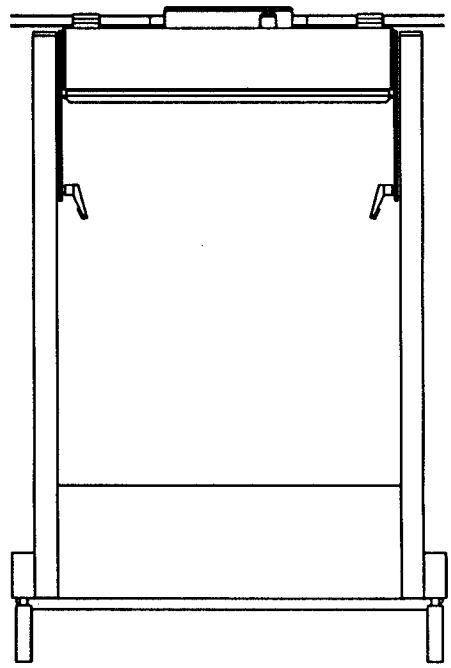

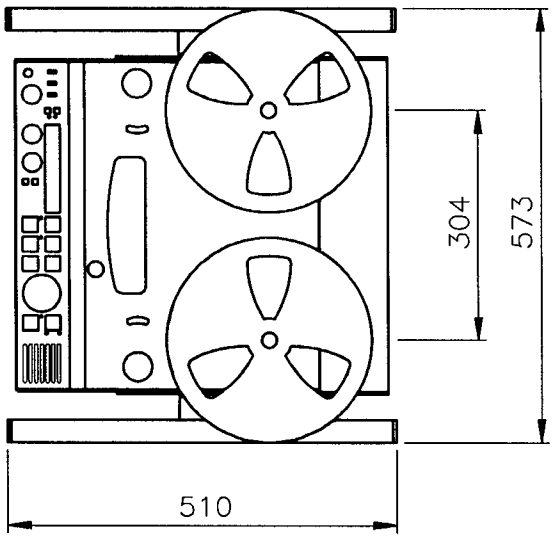

				Anv.	FRIDA	konsol4		
				Lyrec OF DENMARK		Målst. 1:10	Tegn	KS	91.02.12
							Godk.		
				Floorstand		Erst.		
						Mappe		
Nr.	Dato	Sign	Ændring			Ersts.		

DESCRIPTION OF THE FRIDA LOGIC CONTROL SYSTEM

(Version: 1990-11-23)

Chapter title: page:

==========

Figures:

==========

1. INTRODUCTION:

The logic control system of the FRIDA tape recorder consist of two circuit sections:

1. The MAIN CONTROL SYSTEM
2. The PANEL CONTROL SYSTEM.

The two circuits are located on separate circuitbords, which are both equipped with programmed microcontrollers.

The MAIN CONTROL SYSTEM and the PANEL CONTROL SYSTEM are connected by a serial data transmission system. This transmission system transmits status and data between the two control systems. In case of a fatal error in the PANEL CONTROL SYSTEM or a fault in the components associated with the serial transmission system, the MAIN CONTROL SYSTEM will detect the missing communication, and the machine will be forced into the UNLOAD state.

As nearly all logical functions are performed by software, it is most unlikely that the machine will exhibit a logical failure caused by internal controller malfunction. However a faulty or missing key input, sense input signal, control output signal or a defective IC, will of cause result in one or more missing or faulty machine functions.

Fig. 1 shows a simplified view of the complete FRIDA logic control system. This figure only indicates the types of input and output related to the two sections of the system. For more details, refer to the following chapters.

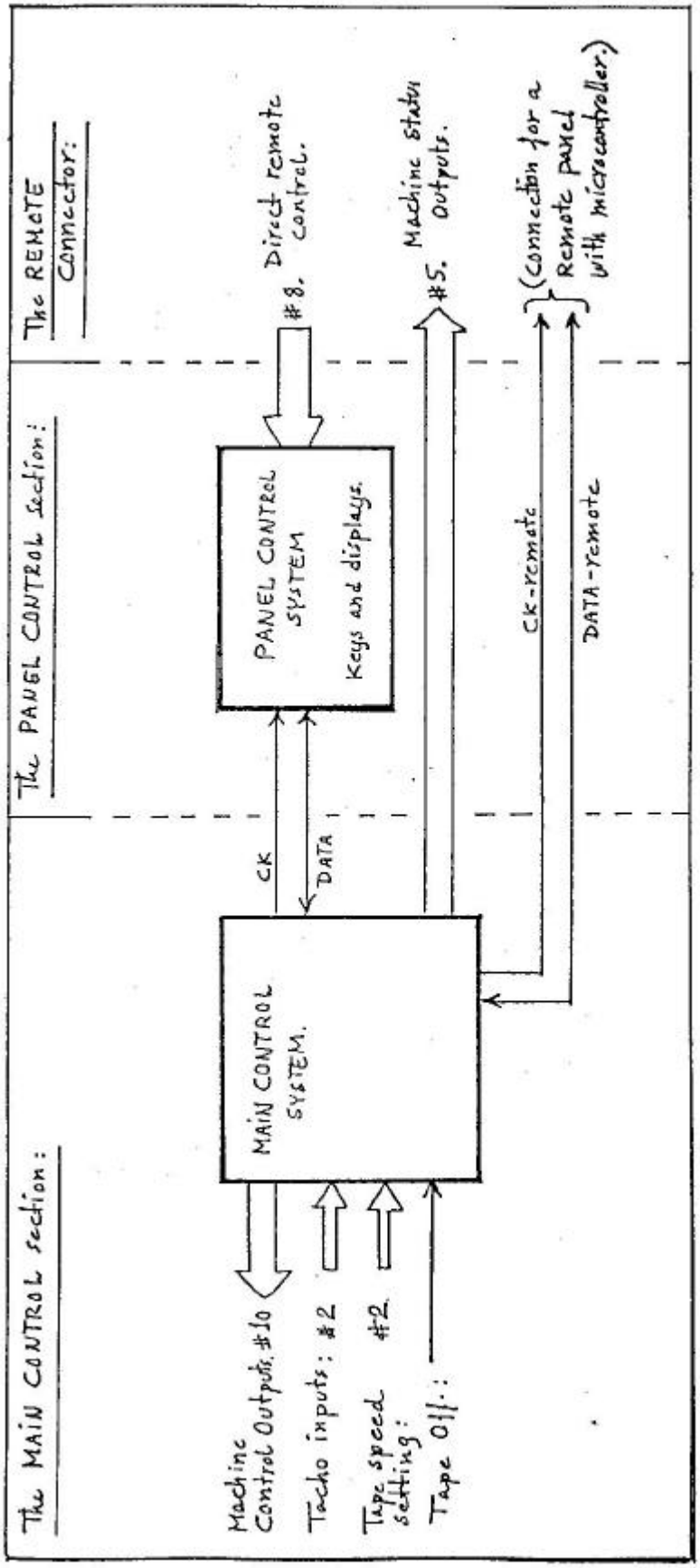

Fig. 1 The Logic Control system.

2. The PRIMARY LOGICAL STATES of the machine:

Fig. 2 shows the primary logical states of the machine. These states are generated by the MAIN CONTROL SYSTEM. The transition from one state into another state is controlled by key commands received from the PANEL CONTROL SYSTEM, in combination with a few direct inputs to the MAIN CONTROL SYSTEM.

As shown in Fig. 2, the LOGICAL STATES are divided into two groups:

1: The group left to the STOP state, being the UNLOADED states.

2: The group right to the STOP state, being the LOADED states. (All states with tape tension ON).

If the machine operates in a LOADED state, and the tape tension goes OFF, the MAIN CONTROL system will immediately force the UNLOAD state.

The EBRAKE (Electrical Braking) state is an internal state used by the MAIN CONTROL. This state is used whenever a STOP in tape motion is needed in order to perform a requested state change.

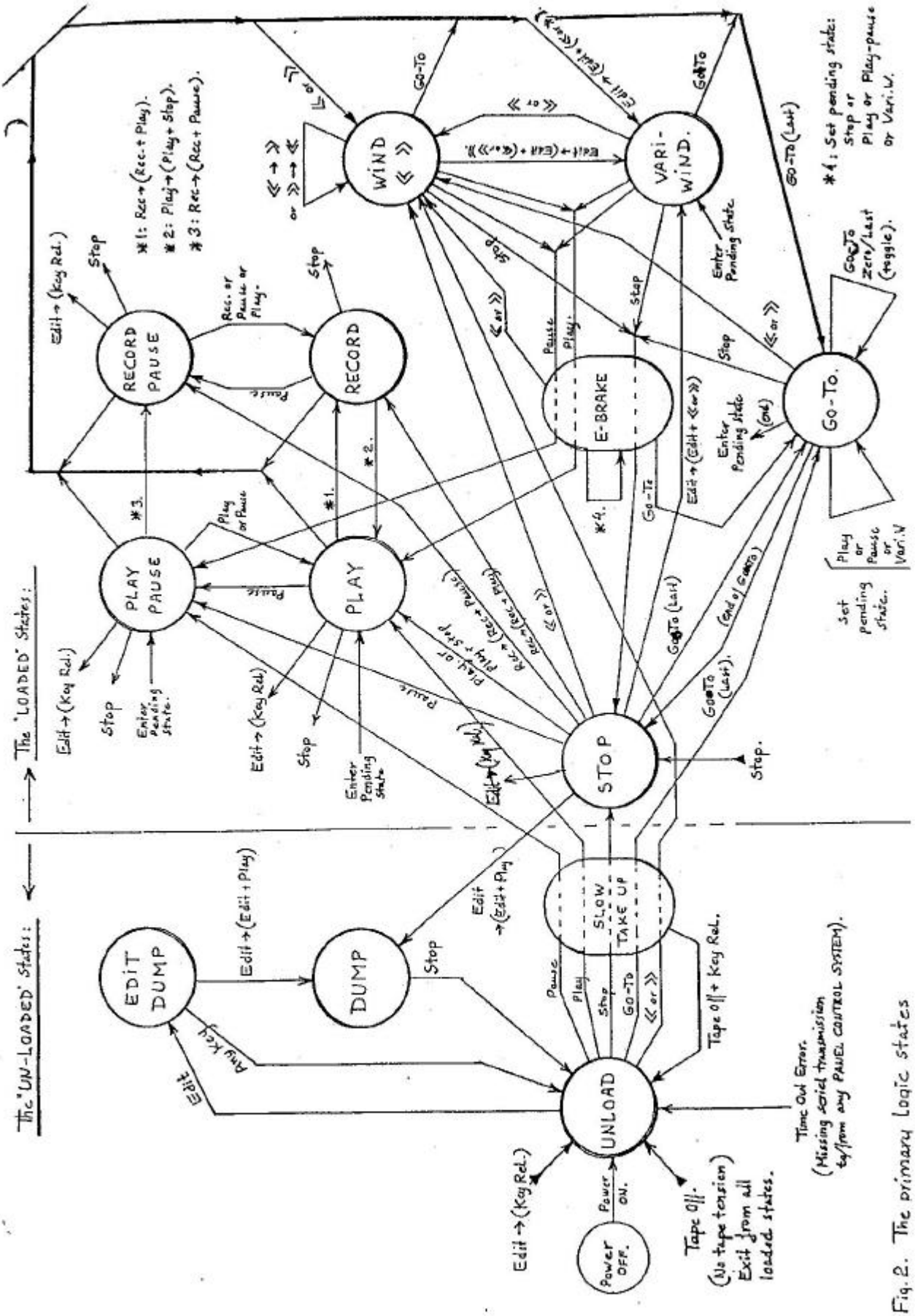

Fig. 2. The primary logic states

5

3. Running the SELF TEST FUNCTIONS and DEBUGGING:

3.1 The SELF TEST FUNCTIONS in general:

The SELF TEST consist of special programmes located both in the PANEL CONTROL SYSTEM and in the MASTER CONTROL SYSTEM.

The SELF TEST FUNCTIONS are ALWAYS activated from the PANEL CONTROL SYSTEM.

The SELF TEST FUNCTIONS can be executed with one or two panels connected to the machine. (A "LOCAL" panel, or the "LOCAL" panel plus a "REMOTE" panel).

The self test functions have been divided in three parts (PART-1, PART-2 and PART-3).

The starting procedure will work from BOTH panels. PART-1 of the SELF TEST will run simultaneously on BOTH panels, provided that the STARTING PROCEDURE is performed simultaneously on both panels. When PART-2 is activated from one of the two panels, ONLY THIS PANEL will be controlling the test.

Relevant debugging procedures are described in each of the sections describing the three parts. Reference is made to other chapters in this manual.

3.2 The SELF TEST STARTING PROCEDURE:

1: Remove any tape from the machine, and switch OFF the power.

2: Make sure that the "LOCAL"- selector (underneath the flap) is in position "ON".

3: Connect the two terminals "JM2" together. "JM2" is located in the right side of the circuit board, located underneath the flap. The section of the circuit board is labelled "UP TEST".

4: Switch ON the power to the machine.

5: Remove the connection between the "JM2" terminals.
The machine is now running a SELF TEST FUNCTION. The type of function activated, depends upon the setting of the selectors "DISPLAY" and "REMOTE", both located under the flap.

3.3 The primary FUNCTIONS of the SELF TEST:

PART-1: A complete local test of all control keys, the timer display, and the LED indicators.

PART-2: A test of the SERIAL TRANSMISSION SYSTEM.

PART-3: A special set of service functions. Different control-signals, motors and the pinchroller/tape lift system can be activated, without having tape loaded on the machine.

3.4 To SELECT and EXECUTE SELF TEST PART-1:

As all test activity is performed internally in the PANEL CONTROL SYSTEM, the panel DOES NOT need to be connected to a MAIN CONTROL SYSTEM. If it is required to run the PART-1 on a completely separate panel, the panel only needs to be supplied with + 5 V.DC.

To select SELF TEST PART-1, set the selectors underneath the flap to:

"DISPLAY"....." TIMER "

"REMOTE PANEL"....." ON "

THEN: PERFORM THE "SELF TEST START PROCEDURE".

OR: In case that the panel was already running SELF TEST PART-2 or PART-3, then just position the selectors as described for running PART-1. (In this situation the START PROCEDURE is NOT needed).

NOTE ! If the machine was already running in SELF TEST PART-3, and one of the special service-functions was activated, this function will remain ON when PART-3 is terminated. If this is NOT desired, PART-3 must be terminated with the selected function set to OFF.

The test principle of PART-1:

The self test programme is looping constantly, while it reads the state of the control keys. When any key is activated, it converts the actual key type into a specific display pattern. During this process, the panel will NOT search for a SYNC signal, and it does NOT send data at the SERIAL TRANSMISSION SYSTEM.

PART-1 is testing the following "HARDWARE":

All panel CONTROL KEYS.
All connections to the "Direct Remote Control". To test these connections, connect the control inputs to GND one at a time, corresponding to the Key activations listed in the running procedure for PART-1.
All panel DISPLAYS and LED indicators.

PART-1 is using the following "SOFTWARE":

PART-1 of the selftest software, located in the panel micro-controller.

The general programmes for detecting activations of panel CONTROL KEYS.

The general programmes for display of data values from the "tape timer RAM buffer".

(A "general programme", is a programme which is also in use during normal machine operation).

The RUNNING PROCEDURE for PART-1:

At start up time, the display must indicate: " -.--.--. " . This pattern is the initial pattern, and it indicates that NO keys are activated.

If the initial pattern is incorrect, see chapter "Debugging during SELF TEST PART-1".

When activating the control keys, ONE at a time, and for a duration of min. 1 SECOND, the following displays and indications shall appear:

(The first group of patterns will be ON as long as the key is activated).

```
Key :    <<     : Display pattern :=  1.11.11
Key :    EDIT   : Display pattern :=   .22.22
Key :    >>     : Display pattern :=  -.33.33.
Key :    REC    : Display pattern :=   .44.44.  REC.  LED := ON.
Key :    STOP   : Display pattern :=   .55.55.  STOP. LED := ON.
Key :    PLAY   : Display pattern := -1.66.66
```

(The second group of patterns will be on for 1 sec. after the key activation. The key must be released before a new activation can be detected).

```
Key :    GOTO   : Display pattern :=   .77.77   LAST.  LED := ON.
 (Wait for approx. 0.5 sec, then activate the "GOTO" key again)
Key :    GOTO   : Display pattern :=   .88.88   ZERO.  LED := ON.
Key :    PAUSE  : Display pattern :=  1.99.99.  PAUSE. LED := ON.
Key :    TIMER ON/OFF  : Display pattern :=    .LL.LL.
Key :    TIMER RESET   : Display pattern :=    .00.00
```

Debugging during SELF TEST PART-1:

The debugging of the PANEL CONTROL SYSTEM in relation to SELF TEST PART-1 is likely to fall within the following categories:

1: The microcontroller is NOT running at all.
   The initial pattern may be wrong, and NO response to key activation.
   (Consult the chapter: "The PANEL CONTROL SYSTEM in general").

2: If NONE of the control keys are operating: Check that the "LOCAL" selector is in position "ON". If so, check that there is 0.V (= GND) at the common terminals of the control keys.
   If these conditions are met, then:
      If the initial pattern is incorrect, then:
      Consult the chapter: "The PANEL CONTROL SYSTEM in general".
      If the initial pattern is correct, then:
      Consult the chapter: "The DETECTION of all types of KEY COMMANDS".

3: The display hardware contains a fault which results in a faulty display pattern. The key activations are "operating", but one or more patterns are wrong or somewhat different from the listed patterns.
   This type of fault may also result in an incorrect initial pattern.
   (Consult the chapter: "The DISPLAY and LED indicators").

4: One or more of the keys are not operating, but some do result in a correct pattern.
(Consult the chapter: "The DETECTION of all types of KEY COMMANDS").

5: A short circuit is present between two or more control keys. This situation may prevent a group of keys from operating correct, but the result of the test depends on the following:

If the shorted keys represents a double activation which is used during normal operation of the machine (such as "REC. + PLAY"), the result will be a missing response for the keys "REC" and "PLAY", plus some other keys in the same "group" (here: " << , EDIT , >> , STOP ").

The keys can be divided into the following three groups:

Group-1: " << , EDIT , >> , REC , STOP , PLAY ".
Group-2: " GOTO , PAUSE ".
Group-3: " TIMER ON/OFF , TIMER RESET ".

If the shorted keys represents a combination which is NOT used during normal operation of the machine, the SELF TEST programme will detect this and a special diagnostic display is generated. The diagnostic display consist of an alternating display between the patterns for the involved keys and the pattern: "HELP".

An example: If the keys " << " and " >> " are shorted together, the display will alternate between:

" 1.11.11 "," HELP "," -.33.33. "," HELP "," 1.11.11 ",etc.

If the keys at the same time are kept permanently activated, the diagnostic display will appear immediately after the start of the SELF TEST PART-1.

The diagnostic display will only operate for keys in "Group-1".

In both the above cases, try to isolate the fault by following the connection between the individual keys and the input circuit to the microcontroller. If nothing is wrong at the input side of IC4, then:
(Consult the chapter: "The DETECTION of all types of KEY COMMANDS").

3.5 To SELECT and EXECUTE SELF TEST PART-2:

NOTE ! If the PART-1 is NOT running correct, this fault must be removed BEFORE running PART-2. However, it might be possible to run PART-2 anyway, but if PART-2 fails, one must keep in mind, that the PART-1 error is likely to cause an error also in PART-2.

To select SELF TEST PART-2, set the selectors underneath the flap to:

"DISPLAY"....." SPEED "

"REMOTE PANEL"....." ON "

THEN: PERFORM THE "SELF TEST START PROCEDURE".

OR: In case that the panel was already running SELF TEST PART-1 or PART-3, then just position the selectors as described for running PART-2. (In this situation the START PROCEDURE is NOT needed).

NOTE ! If the machine was already running in SELF TEST PART-3, and one of the special service functions was activated, this function will remain ON when PART-3 is terminated. If this is NOT desired, PART-3 must be terminated with the selected function set to OFF.

The test principle of PART-2:

This test performs a complete test of the SERIAL TRANSMISSION SYSTEM. It does this by sending the status "SELF TEST MODE" to the MAIN CONTROL SYSTEM. As long as this status is present, AND the "REMOTE PANEL" selector is "ON", the PANEL transmits a four bit code, in relation to an activated control key. The MAIN CONTROL SYSTEM returns the four bit code in four "positions" of each transmission cycle. The PANEL then receives the four identical four bit codes and generates a direct display of the data codes.

PART-2 is testing the following "HARDWARE":

All hardware circuitry connected to the SERIAL TRANSMISSION SYSTEM.

(If the test is performed from the LOCAL panel, only the circuitry which is used for this panel is tested. To test the remaining circuitry, perform the same test from a REMOTE panel).

PART-2 is using the following "SOFTWARE":

In the PANEL CONTROL SYSTEM:

The PART-2 of the panel self test programmes.

The general programmes for detecting activations of panel CONTROL KEYS.

The general programmes for display of data values from the "tape speed RAM buffer".

The general programmes for: Detection of the serial transmission SYNC signal.
Receiving and transmitting of SERIAL DATA.

In the MAIN CONTROL SYSTEM:

The special self test programme for returning of data codes to the panel.

The general programmes for: Generation of the SYNC. and SERIAL CLOCK signals.
Transmitting and receiving of SERIAL DATA.

(A "general programme", is a programme which is also in use during normal machine operation).

PART-2, the RUNNING PROCEDURE :

At start up time, the display must indicate: " --.-- " . This pattern is the initial pattern, and it indicates that NO keys are activated.

If the initial pattern is incorrect, see chapter "Debugging during SELF TEST PART-2".

When activating the control keys, ONE at a time, the following displays must appear:

```
Key:   <<    : Display pattern :=    11.11  (Data code: 0 0 0 1 ).
Key:   EDIT  : Display pattern :=    22.22  (Data code: 0 0 1 0 ).
Key:   >>    : Display pattern :=    33.33  (Data code: 0 0 1 1 ).
Key:   REC   : Display pattern :=    44.44  (Data code: 0 1 0 0 ).
Key:   STOP  : Display pattern :=    55.55  (Data code: 0 1 0 1 ).
Key:   PLAY  : Display pattern :=    66.66  (Data code: 0 1 1 0 ).
Key :  Any NOT-allowed double-key activation:
       : Display pattern :=   "  .  " (Data code: 1 1 1 1 ).
```

(A "NOT allowed" key activation is a key combination which is NOT used during normal operation of the machine).

The indicated "Data codes" are the transmitted four bit codes. These codes corresponds to the hexadecimal values of the displayed digit values.

Debugging during SELF TEST PART-2:

The debugging of the PANEL CONTROL SYSTEM and the MAIN CONTROL SYSTEM in relation to SELF TEST PART-2 is likely to fall within the following categories:

1: If there is NO response to the activation of ANY key, and SELF TEST PART-1 is running correct, then:
   Consult the chapter:"The SERIAL TRANSMISSION SYSTEM".

   If NO SIGNALS can be found operating at the SERIAL TRANSMISSION SYSTEM, then: Consult the chapter: "The MAIN CONTROL SYSTEM in general".

2: If the responses of some keys are correct, and incorrect for others, then:
   If the SELF TEST PART-1 is running correct, then:
   Consult the chapter: "The SERIAL TRANSMISSION SYSTEM".

3.6 To SELECT and EXECUTE SELF TEST PART-3:

NOTE ! If PART-1 and PART-2 cannot run correctly at the machine, it has no meaning trying to run PART-3 !

To select SELF TEST PART-3, set the selectors underneath the flap to:

```
"DISPLAY"........." SPEED "
"REMOTE PANEL"....." OFF "
```

THEN: PERFORM THE "SELF TEST START PROCEDURE".

OR: In case that the panel was already running SELF TEST PART-1 or PART-2, then just position the selectors as described for running PART-3. (In this situation the START PROCEDURE is NOT needed).

The test principle of PART-3:

This part of the self test system is primary concerning the MAIN CONTROL SYSTEM, therefore in relation to PART-1 and -2, no additional functions are tested in the PANEL CONTROL SYSTEM.

PART-3 makes it possible to establish individual control of the WIND MOTORS, the CAPSTAN MOTOR, the PINCHROLLER/TAPE LIFT SYSTEM, and the RECORD and ERASE control signals, all WITHOUT having tape loaded at the machine.

PART-3 is using the same control keys and display codes as for PART-2, in fact the system is running PART-2 just with a change in the panel output. This change is the state of the "REMOTE PANEL"-selector. When the MAIN CONTROL SYSTEM detects that the PANEL is in SELF TEST MODE, and that the "REMOTE PANEL" is set to OFF, it will use the received data codes TO SELECT what machine function to operate, and the status of the "TIMER ON/OFF" and the "TIMER RESET" are used to switch the selected machine function on/off. (These two "controls" can be used in random, as they both have the same effect).

PART-3 is testing the following "HARDWARE":

The same functions as for PART-2, plus:

Most of the CONTROL OUTPUTS of the MAIN CONTROL SYSTEM.

The "basic operation" of the WIND MOTORS, the CAPSTAN MOTOR, the control signals for RECORD and ERASE, and the PINCHROLLER/TAPELIFT SYSTEM.

(The term "basic operation" indicates that the system cannot verify these machine components to the full and necessary specifications, to do this please consult the appropriate chapters in this manual).

PART-3 is using the following "SOFTWARE":

In the PANEL CONTROL SYSTEM:

The same as for the PART-2.

In the MAIN CONTROL SYSTEM:

The same as for PART-2, plus:

Special programmes for selecting and controlling different machine functions.

The general programme for setting of the CONTROL OUTPUTS.

(A "general programme", is a programme which is also in use during normal machine operation).

PART-3, the RUNNING PROCEDURE :

At start up time, the display must indicate: " --.-- " . This pattern is the initial pattern, and it indicates that NO keys are activated.

If the initial pattern is incorrect, see chapter "Debugging during SELF TEST PART-2".

When activating the normal control keys, the associated display pattern will appear on the display, and at the same time, it is used to select a set of "PHASE's" of machine functions.

The activation of either "TIMER ON/OFF" or the "TIMER RESET" keys, will cause a change between the current "PHASE" and the next "PHASE" of the actual setting possibilities. (If the current "PHASE" is the last "PHASE" in a set, the next will be the first "PHASE").

The change of "PHASE" is simply done in relation to the LATEST activated "Display pattern", as the MAIN SYSTEM will remember what set of functions to select between. Any time a new pattern is selected, the previous function will be set to "OFF" at the FIRST FOLLOWING activation of either "TIMER ON/OFF" or "TIMER RESET".

Key: << : Display pattern := 11.11 (Data code: 0 0 0 1).

Provides control of the following machine functions:

PHASE.1 : Sets the REWIND MOTOR to ON.
(Using the CONTROL OUTPUT: "Supply Motor").

PHASE.2 : Sets the REWIND MOTOR to OFF.
(Setting ALL CONTROL OUTPUTS to OFF).

Key: EDIT : Display pattern := 22.22 (Data code: 0 0 1 0).

Provides control of the following machine functions:

PHASE.1 : Sets the machine into VARIWIND.
(Using the CONTROL OUTPUTS: "A1" and "A0").

PHASE.2 : Sets VARIWIND to OFF.
(Setting ALL CONTROL OUTPUTS to OFF).

Key: >> : Display pattern := 33.33 (Data code: 0 0 1 1).

Provides control of the following machine functions:

PHASE.1 : Sets the FORWARD MOTOR to ON.
(Using the CONTROL OUTPUT: "Take Up Motor").

PHASE.2 : Sets the FORWARD MOTOR to OFF.
(Setting ALL CONTROL OUTPUTS to OFF).

Key: REC : Display pattern := 44.44 (Data code: 0 1 0 0).

Provides control of the following machine functions:

PHASE.1 : Sets the CONTROL OUTPUT: "RECORD" to ON.

PHASE.2 : Sets the CONTROL OUTPUT: "ERASE" to ON. (and "RECORD": OFF)

PHASE.3 : Sets both "RECORD" and "ERASE" to ON.

PHASE.4 : Sets ALL CONTROL OUTPUTS to OFF.

Key: STOP : Display pattern := 55.55 (Data code: 0 1 0 1).

Provides control of the following machine functions:

PHASE.1 : Sets the PINCHROLLER/TAPELIFT SYSTEM into position: "PAUSE".
(CONTROL OUTPUTS: "C0" = 0, "C1" = 1).

PHASE.2 : Sets the PINCHROLLER/TAPE LIFT SYSTEM into position: "PLAY/RECORD".
(CONTROL OUTPUTS: "C0" = 1, "C1" = 1).

PHASE.3 : Sets the PINCHROLLER/TAPE LIFT SYSTEM into position: "LIFT OUT".
(CONTROL OUTPUTS: "C0" = 0, "C1" = 0).
(This corresponds to ALL CONTROL OUTPUTS to OFF).

PHASE.4 : Sets the PINCHROLLER/TAPE LIFT SYSTEM into position: "STOP/UNLOAD"
(CONTROL OUTPUTS: "C0" = 1, "C1" = 0).

Key: PLAY : Display pattern := 66.66 (Data code: 0 1 1 0).

Provides control of the following machine functions:

PHASE.1 : Sets the CAPSTAN MOTOR to ON.
The motor will run in relation to the tape speed selector.
(Using the CONTROL OUTPUT: "Capstan Motor").

PHASE.2 : Sets the CAPSTAN MOTOR to OFF.
(Setting ALL CONTROL OUTPUTs to OFF).

Key: Any NOT allowed double key activation:

: Display pattern := " . " (Data code: 1 1 1 1).

NOTE : This will cause the MAIN SYSTEM to CANCEL the latest valid function selection ! It is then necessary to RESELECT whatever function is desired.

Debugging during SELF TEST PART-3:

If the CONTROL OUTPUTS are not acting correctly, then:

Consult the chapter: "The generation of the CONTROL OUTPUTS".

If the CONTROL OUTPUTS are operating correctly, but the controlled function does NOT behave correctly, then:

Consult the appropriate chapter located elsewhere in this manual.

3.7 Debugging the FRIDA LOGIC CONTROL SYSTEM:

The intention of this section is to give an overall view of how to debug the FRIDA LOGIC CONTROL SYSTEM. As the following chapters gives both a functional description, and where possible, a set of debugging hints, this chapter does not contain details, but refers to other chapters.

Having a fault at the FRIDA LOGIC CONTROL, this fault is assumed to fall into one out of three categories. These categories and the recommended actions are described in the following.

Fault categories in general:

It is in general assumed that a "REMOTE PANEL" is NOT available.

If however, a REMOTE PANEL is available, ANY problem which is suspected to be in the PANEL CONTROL SYSTEM, can easily be verified by trying to operate the machine from the REMOTE PANEL.

NOTE: If the problem is not present when using the REMOTE PANEL, the fault may still be located at the MAIN CONTROL SYSTEM. The reason for this is that this control system contains individual circuitry for the SERIAL TRANSMISSION of data to/from the two panel systems.

Fault category nr. 1 :

The LOCAL PANEL provides no control of any machine function.

In this situation one out of two conditions are possible:

1: The "STOP" LED keeps flashing, but the machine will NOT exit the UNLOAD state.

The following procedure is recommended:

Remove any tape from the machine. Check that when depressing any key, the supply motor is rotating slowly clock wise ("slow take up").

If this is NOT OK:

Check that the selector "LOCAL" (under the flap) is in position "ON". If it is "ON", one of the following areas might contain a fault:

The fault can be in the detection of the key input to the PANEL. Run the SELF TEST PART-1. If any key function is failing, follow the PART-1 debugging description.

The fault can be that CONTROL OUTPUTS from the MAIN CONTROL SYSTEM are missing totally. Consult the chapter: "The generation of the CONTROL OUTPUTS".

The fault can also be in the serial data output FROM the PANEL, but as the "STOP" LED is flashing, the serial transmission is running, and the PANEL is synchronising with the MAIN CONTROL SYSTEM !

In this situation a fault in the serial transmission circuitry might prevent serial data from being sent out of the PANEL, or prevent the same data from entering the MAIN CONTROL SYSTEM.

If the supply motor is rotating:

Check that the signal "TAPE OFF", which is an input to the MAIN CONTROL SYSTEM, is operating in relation to the leftmost servoarm.

If jumper JM1 (on Tape Timer/Logic sensor pcb) is not present, the signal "TAPE OFF" is generated as a logic AND between left servo arm sensor and the optical tape presence sensor.

If jumper JM1 (on Tape Timer/Logic sensor pcb) is present, the signal "TAPE OFF" is generated by the left servo arm sensor only. The signal from the optical tape presence sensor is ignored.

If this signal for some reason is missing, the machine will NOT enter ANY of the LOADED states.

If this signal is present at the input of the MAIN CONTROL SYSTEM, consult the chapter "The MAIN CONTROL SYSTEM in general". This chapter gives a method for verifying the inputs through IC11.

2: The "STOP" LED is NOT flashing, and the PANEL appears "dead":

The following procedure is recommended:

Consult the chapter: "The PANEL CONTROL SYSTEM".
Check that the microcontroller appears to be running.

If the microcontroller is running:

Consult the chapter: "The SERIAL TRANSMISSION system".

The fault may be in the MAIN CONTROL SYSTEM, as a fault in this part of the control system may stop the serial transmission, and thereby prevent any control action from the PANEL CONTROL system.

Fault category nr. 2 :

The LOCAL PANEL is providing control of most of the machine functions, but one or more functions are not working at all.

It is most likely that this type of fault is located outside the logic control system. However, it is possible that the MAIN CONTROL SYSTEM is having a fault in the circuitry generating the CONTROL OUTPUTS.

The following procedure is recommended:

1: Try to run the SELF TEST PART-3, and check that ALL controls are operating.

2: If one or more controls are failing to operate, consult the chapter: "The generation of the CONTROL OUTPUTS".

3: If the fault for some reason is more complex, consult the chapter "The function of all LOGIC STATES". Find the state description which relates to the actual fault, and test if the control outputs are set correctly. In complex situations it is also recommended to test the state of those outputs which are NOT specified to be ON. These must all be OFF.

Fault category nr. 3 :

The LOCAL PANEL is providing full control of all functions, but the PANEL DISPLAY is wrong in some way, or some functions are operating more or less incorrectly.

In this situation it is important to evaluate if the fault is a malfunction in the display itself, or if it is the function to be displayed which is faulty.

The following procedure is recommended:

1: Try to run the SELF TEST PART-1.
If all displays are set correctly, continue with point 2.
If NOT: Follow the debugging procedure for SELF TEST PART-1.

2: Consult the chapters: "The TAPE TIMER system" and/or "The TAPE SPEED measuring system".

Check that the described hardware functions appears to be operating.

If a fault is present in this circuitry, both the TAPE TIMER and the TAPE SPEED measuring system will be wrong.

Depending upon how faulty this circuitry might be, one or more machine functions will be affected. The TAPE SPEED will be detected as LOW, and the tape lift will NOT lift the tape at high speed. The GOTO function will "run wild" as the TAPE TIMER does not indicate the correct physical position of the tape.

4. The MAIN CONTROL SYSTEM:

The MAIN CONTROL SYSTEM is described in the following chapters:

1: The MAIN CONTROL SYSTEM in general.

2: The TAPE TIMER, and the detection of TAPE MOTION DIRECTION.

3: The TAPE SPEED measuring system.

4: The MASTER SECTION of the SERIAL TRANSMISSION SYSTEM.

5: The generation of the CONTROL OUTPUTS.

6: The FUNCTION of all LOGIC STATES.

7: The STATE CHANGE between LOGIC STATES.

8: The FUNCTIONAL PART of some of the SELF TEST FUNCTIONS.

The following chapters gives a short and strongly simplified explanation of how some of these function are implemented. The purpose of these explanations is to provide a basic understanding of how different types of hardware errors might affect the machine functions. All hardware references are referring to the MAIN CONTROL schematic found in diagram # 2390.

4.1 The MAIN CONTROL SYSTEM in general:

The MAIN CONTROL SYSTEM consist of a programmed microcontroller IC3 (type: 8039). This is the same type of controller as the controller used in the PANEL CONTROL SYSTEM, the only difference is that the main controller is equipped with an external programme memory, and the panel controller is using the type 8749 controller with 2k bytes of internal "on chip" programme memory.

The connection of IC3 pin 7, the "EA" (External Access) to + 5.V. makes the controller read the programme instructions using the external circuitry. (IC9 and IC10). The type of controller used for the PANEL CONTROL (8749) can therefore also be used in the main control system, but NOT the other way around !

Both controllers are running at a crystal controlled clock frequency of 9.8304 MHz.

The IC9 (type: 74373) is used for latching the address for the next access to the programme memory IC10 (type: 2732 4k bytes of E-prom). The address latching is necessary because the micro-controller is MULTIPLEXING its DATA BUS between addresses for the programme memory, and data from these devices. The operation of the programme memory (the E-prom) is controlled by the two timing signals "ALE" and "PSEN". The use and timing of these signals are as follows:

The controller drives the eight lower bits of the programme address on to the DATA BUS ("DB0.."DB7"on IC3 pin 12..19), and the address is clocked into IC9 at the "1" to "0" transition of the "ALE" signal (IC3 pin 11).

At the same time the Port 2 bit 0 to 3 (IC3 pin 21..24) is set to the four most significant bits of the programme address. A total of 12 address bits are now present at the address inputs "A0".."A11" of IC10. The controller then "floats" the data bus (setting to high impedance), and generates the "PSEN" signal (IC3 pin9). This signal is used as chip- and output enable to the IC10. The IC10 will now drive the next instruction code (8 bits) on to the DATA - BUS, and at the "0" to "1" transition of the "PSEN" signal the controller reads the instruction code from the DATA BUS.

Fig. 3 shows the timing relation between the signals "ALE", "PSEN", the "DATA BUS", and the Port 2 part of the programme address. This signal sequence is called the "INSTRUCTION FETCH", as the controller must fetch the next instruction code, from the programme store, prior to execution.

The cycle time of the "ALE" signals is called the controller cycle time. As some types of the controller instructions requires TWO cycles, some signals will not be completely periodic when observed at an oscilloscope.

In case of a hardware error in connection to either IC9, IC10 or the DATA BUS of the IC3, the microcontroller will keep "trying" to run the programme. The reason for this is that the microcontroller cannot be stopped as long as the clock oscillator is running. Because of this, the controller will execute whatever instructions are coming out of the E-prom (IC10).

In order to verify the programme store circuit, insert an IC10 which is erased (= "empty", no programme inside). Such a "programme" contains the code "FF" (in hex) at ALL addresses. This instruction is completely harmless, and does not lead to any branches during the programme execution. The microcontroller will continuously increment the internal "programme counter" as it cycles through the lower 2k of addresses in the empty E-prom. When this activity is observed in the external circuit, it appears very much like a sequential binary "counting" at the lower 11 bits of the E-prom address.

To perform this verification, start by observing the "A0" address bit, every higher address bit must be running at half the frequency of the prior lower bit number. The "A10" address bit is the highest bit which can be checked in this manner.

The "A11" addr. bit can only be set under programme control, and in this situation it must remain LOW at the trailing edge of the "ALE" signal. If the "A11" address bit for some reason is connected to 0 V. the machine can do absolutely nothing.

In UNLOAD or STOP, the "A11" signal will normally be pulsing (an approx. 300 us burst signal) from + 5 V to 0 V. The intervals will be approx. 7 ms, being the repetition rate of the SERIAL TRANSMISSION SYSTEM.

The + 5 V level is normally a rather "noisy" + 5 V DC level, as it is the positive supply connection to the microcontroller "seen" through an internal pull up resistor (inside IC3). In other states the "A11" signal will behave in a rather complex manner. However, in general the signal will pulse "low" during the tape timer update and tape speed measure activity, this can be observed during PLAY, RECORD or WIND.

To verify the DATA BUS lines, it can be checked that ALL eight lines are toggling between 0 V and + 5 V. DO NOT try to check the signals in an absolute manner, as the behaviour of these signals will ALWAYS be extremely complicated. The logic signals at the DATA BUS are time multiplexed between the following types of signals:

1: The address of the next instruction to be read out of the E-prom. (Strobed by the "ALE" signal).

2: The one byte instruction code (or instruction "immediate-data"). (Strobed by the "- PSEN" signal).

3: The reading of the inputs connected to IC11 (Three state bus driver). (Strobed by the "- RD" signal).

If it becomes necessary to verify those inputs which are entering the microcontroller via IC11, connect an oscilloscope to DISPLAY and trigger on IC3 pin 8 ("- RD"), or IC11 pin 1 + 15. Set the timebase and intensity in order to observe the logic "0" (low level) of the signal. (The signal goes low for approx. 0.75 us every 7 ms.). If this signal can be observed, it can be checked that the inputs to IC11 are transferred to the IC3 pin 12 to 17.

If there are no fatal IC errors present, the clock is running, the IC9 and IC10 appears to be functioning, and the controller is still NOT executing the programme, the possible reasons may be:

1: The DC supply is less than + 4.75 V.

2: IC3 pin 7 "EA" is not at + 5 V.

3: IC3 pin 4 "RESET" is permanently at 0 V.

4: IC3 pin 5 "SINGLE STEP" is at 0 V. (is normally + 5 V, NO connection).

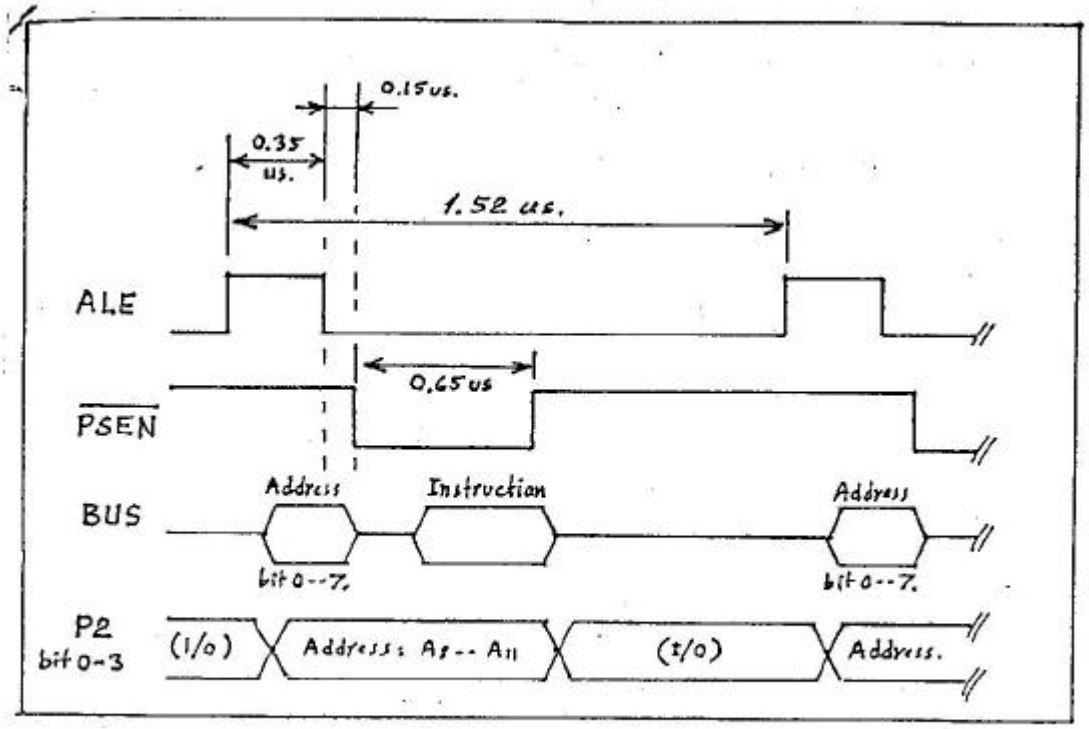

Fig.3 The timing of the INSTRUCTION FETCH.

4.2 The TAPE TIMER, and the detection of TAPE MOTION DIRECTION.

The TAPE TIMER is almost entirely implemented in software. The few hardware components involved are three "Schmidt trigger" type inverters and a single J-K flip flop. Both the inverters (IC1) and the flip flop (IC2) operates on a Vcc of + 15 V.

The two tacho signals "TC0" and "TC1" are generated from the tacho disc with an internal phasedifference of approx. 90 degrees.

The "TC0" signal is fed through an inverter and then it is used as clock for both the J-K flip flop and the microcontroller (IC3, input: "T1" pin 39). The microcontroller uses this signal (at + 5 V. level) as CLOCK for the TAPE TIMER COUNTER in both the UP and DOWN counting direction. In situations where the TAPE TIMER for some reason is STOPPED, this stop is done by software, and can only be "seen" by the fact that the TAPE TIMER DISPLAY is not being updated.

The "TC1" signal is also fed through an inverter, and is then used as the J-input, while the same signal through another inverter is used as the K-input. As the flip flop is clocked by the other tacho signal "TC0", the output will be clocked to either high or low state depending upon the state of the "TC1" signal at the time of the clock "0" to "1" transition. (Note: "1" is + 15 V). The "Q"-output of the flip flop is now indicating the DIRECTION of the tape motion.

If the output is HIGH the direction is FORWARD, and if it is LOW the direction is REVERSE. The direction signal is transferred to the + 5 V level, and is then used as input for the microcontroller (IC3, input: "T0" pin 1). The same signal is also input for a set of inverters which provides the "TDIR" signal to pin 13 of the "SYNCHRO" connector.

The input clock period time (= the period time of the tacho signal) is at the nominal tape speed for 3.75 "/sec.equal to 1/64 sec (tp = 15.6 ms), for 7.5 "/sec.: 1/128 sec (tp = 7.8 ms), and for 15 "/sec. it is 1/256 sec (tp = 3.6 ms). "tp" equals the Time for one Period of the signal.

Inside the microcontroller the tacho clock is first divided by 8, this is done by a hardware-prescaler inside the IC. At the tape speed of 3.75"/sec, this gives intervals of 1/8 sec. The output of the prescaler is used to interrupt the normal programme execution in the microcontroller. At each interrupt, a 3 bit software counter is updated. At the time of "overflow" from this counter, eight intervals of 1/8 sec (= 1 sec.) has elapsed, and then the 16 bits binary TAPE TIMER COUNTER is updated. Fig. 4 shows the structure of the complete TAPE TIMER system, the dotted lines indicates the separation between the hardware and software parts.

Depending upon the selected tape speed, one of the three bits in the three bit software counter is transmitted to the PANEL SYSTEM for display as the "decimal point" right to the * 1 second digit. By doing this, the decimal point will be ON for 1/8 sec. (tape time), and OFF for the following 1/8 sec. This function is always active, also in cases where the tape timer is OFF.

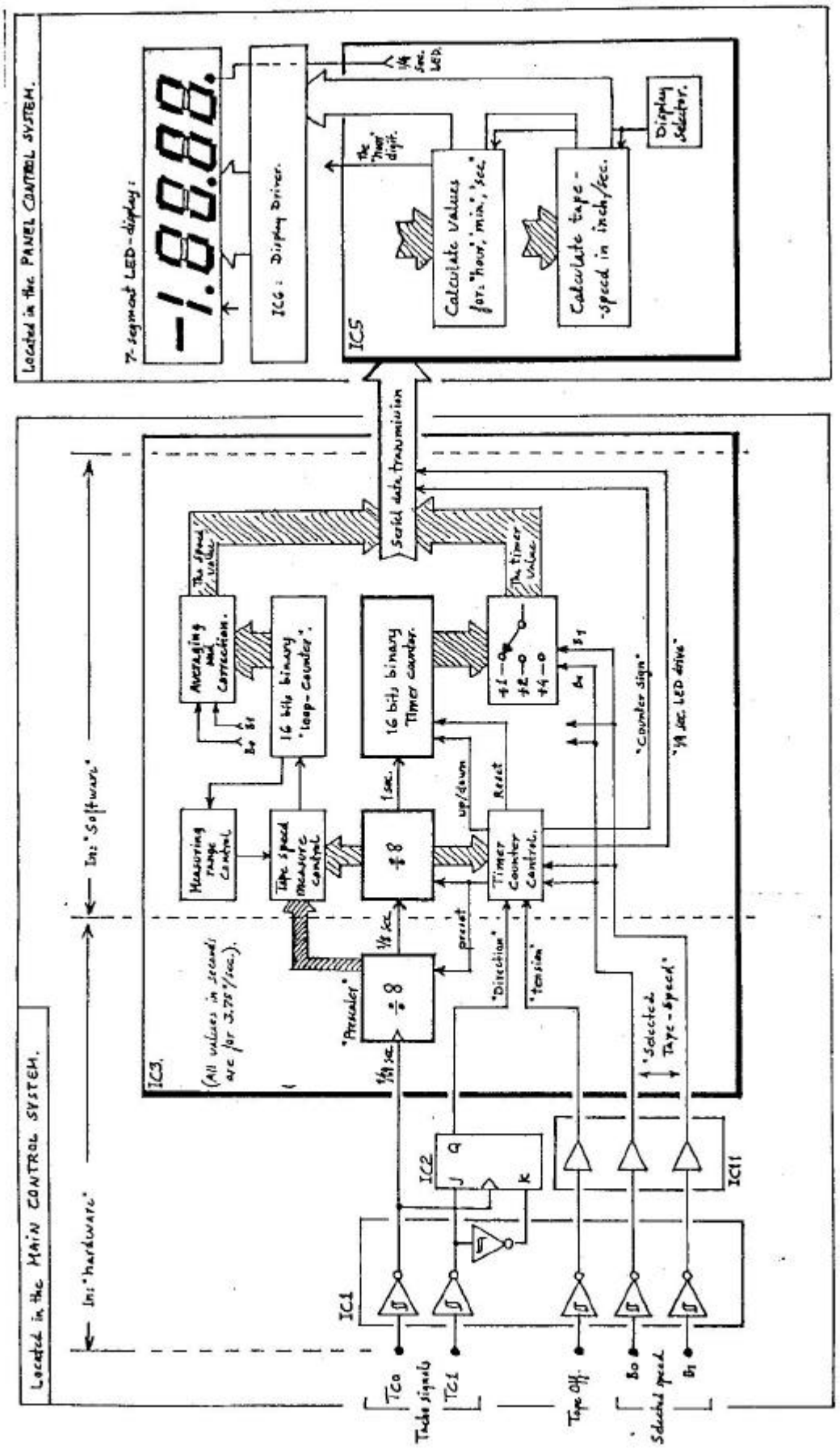

Fig. 4. The TAPE TIMER system.

Depending upon the actual TAPE MOTION DIRECTION, the 16 bits TAPE TIMER COUNTER is updated in either the "UP" or "DOWN" direction. At 3.75"/sec this update represents 1 second. At 7.5"/sec it represents 0.5 sec and at 15"/sec 0.25 sec of tape time.

If the TAPE TENSION for some reason is missing, the TIMER COUNTER is stopped by software inside the microcontroller. The TAPE TIMER can also be STOPPED or RESET to all zero, due to KEY COMMANDS from the PANEL.

The internal prescaler and the three bit software counter are ALWAYS counting UPWARDS, independent upon the actual TAPE MOTION DIRECTION. When a change in motion direction is detected, the controller calculates and inserts a "complementary" value in both counters. This correction of the counter values assures a minimised counting error as a consequence of a direction change. The "error" is max 1/128 sec at 3.75"/sec, corresponding to 1/256 sec at 7.5"/sec, and 1/512 sec at 15"/sec. As successive changes in direction gives errors of random size and "sign", the resulting error is NOT accumulating, therefore the effective error is close to zero and can be neglected.

As the range of a 16 bits binary counter is 65 535 counts, this gives a "worst case" range at 15"/sec of 16 383 seconds, or 4 hours and 55 minutes. As the sign of this counter is located apart from the counter itself, the resulting max. range is +/- 4 hours and 55 minutes. This counter is always counting in fractions of seconds (1/1 sec, 1/2 sec or 1/4 sec), the calculations into the displayed values of hours, minutes and seconds are done in the PANEL SYSTEM.

A consequence of this functional distribution is, that it is not possible manually to "read" the tape timer value by observing the serial data values. It is possible however, to observe a binary incrementing or decrementing counter activity. (The LSB is always 1 second).

If the counter value exceeds 1 hour, 59 minutes and 59 seconds, the "1 hour" digit at the PANEL DISPLAY will be flashing. The counter will be operating correctly, but the 1 hour digit will be misleading. When the value again is lowered, the flashing will be stopped, and the indicated timer value in the 1 hour digit is again correct.

When changing between the three standard tape speeds, a corresponding code is presented to the MAIN CONTROL circuit at the "B0" and the "B1" inputs. The following table shows the coding of the tape speed signals:

Selected tape speed:	"B0"	"B1"
3.75 inch/second	1	0
7.50 - - -	0	0
15.0 - - -	0	1

("0" = 0 volt, "1" = + 15 volt)

The two signals are fed through two Schmidt trigger inverters (operating at + 15 V). The outputs of the inverters are transferred to the 0/+5 V range, and are inputs to IC11 which is a three state driver. The TAPE OFF signal which signals if the TAPE TENSION is ON, is fed to this driver in the same manner. This signal is externally combined with the signal from the reflective "tape presence" - sensor.

The microcontroller reads these inputs by performing a read operation to an external "memory" device. The read strobe signal "RD" (IC3 pin 8) will go LOW for approx. 425 ns. In this short interval, the IC11 will drive some of the databus lines ("DB0"..to.."DB5"), and the microcontroller gets the current output, and thereby the inputs to the IC11 driver.

The TAPE SPEED CODE is used to decide what part of the 16 bit TAPE TIMER COUNTER that the system must use for display of the tape timer value. If the tape speed is 3.75"/sec all the 16 bits are used, if the speed is 7.5"/sec the value is "divided" by 2, and at 15"/sec the value is "divided" by 4. This "division" is ONLY effective for purpose of the timer display, and all internal use of the timer value is based upon the "basic" value having a resolution of 1 sec at 3.75"/sec. Seen from the user of the machine, this timer concept is experienced as three independent counters, but internally it is formed by ONE basic counter, which is displayed using different scaling factors.

The internal GOTO reference position (The LAST ref.), and the calculation of the "distance" from the current position to the reference position (ZERO or LAST), are both based upon the basic counter value. In this manner the GOTO function becomes independent of the changing of the selected speed, no matter when the speed change is performed. The effect of this is, that a created LAST reference becomes a certain physical position on the tape. This position is now maintained no matter any change in speed setting.

If the user performs a "TIMER RESET", the LAST reference is corrected in relation to the actual tape position, and the physical position reference is unchanged.

4.3 The TAPE SPEED measuring system.

At specific COUNTING INTERVALS the microcontroller performs a measurement of the actual tape speed. This measurement system is activated at the values "2" and "6" of the three bit software counter (ranging from "0" to "7").

As the three bit counter increments for every 1/8 sec (at 3.75"/sec), and as there is 64 tacho pulses (= 8/8 = 1 sec) per rotation of the roller, the tape speed will always be measured twice per rotation of the roller.

The actual way in which the speed is measured, is by performing a real time measurement of two increments of the 3 bit hardware prescaler (also inside the microcontroller). The result of this time measurement is a 16 bit word. The measurements are performed in three ranges. The ranging system is automatically selecting the best range in relation to the actual tape speed, and is designed to produce the required measurement accuracy and resolution (better than 0.01"/sec) in the shortest possible time. (Further details on the function of the measuring principle is outside the range of this document).

The time reference for this measurement is the crystal oscillator driving the microcontroller. If this clock frequency for any reason differ from the correct frequency of 9.8 MHz, all speed measurements will have a corresponding error. In case of a TOO LOW frequency, the speed indication will be TOO HIGH.

If the speed goes below approx. 2.4"/sec, the system will exit "range 1", and enter a "underrange" state. No new results will be produced in this state. Independent on how low the speed may be, the system will always try to perform a measurement at the internal counter values "2" and "6". In case of an increasing tape speed, the "underrange" state may be cancelled again, and the system will enter "range 1".

In the upper range there is no limit, and the system will remain in "range 3" from approx. 10"/sec and upwards. The only change at higher speeds is a decrease in measurement resolution (>0.01"/sec above approx. 20"/sec). At speeds above 99.22 "/sec the display of tape speed is inhibited, but the speed is still measured for internal use.

In order to prevent the speed display to exhibit unwanted changes in the 0.01 "/sec digit, caused by extremely small changes in the tape speed around the nominal tape speed (0.001 "/sec or smaller can be detected !), the shown value of the tape speed is the result of a calculated average of four succeeding measurements. Furthermore the shown value is rounded off to indicate the exact nominal speed value, whenever the measured value is within the allowed range of speed variation for the machine.

Internally in the MAIN CONTROL SYSTEM the tape speed value is represented by the actually measured 16 bit value. This value is a "loop counter value" having a LSB resolution in microsecond range. This binary representation of the measured speed is used by the MAIN CONTROL for all testing of the tape speed. For display purpose the "loop counter value" is modified in relation to the selected tape speed, and is then transmitted to the panel. The PANEL CONTROL SYSTEM then performs a calculation into the inch/second value, which can be selected for display as an alternative to the tape timer value.

A consequence of this functional distribution is, that it is not possible to manually "read" the tape speed value by observing the serial data values.

4.4 The MASTER SECTION of the SERIAL TRANSMISSION SYSTEM.

The MASTER SECTION of the SERIAL TRANSMISSION SYSTEM is the part of the system which generates the SYNC SIGNAL and the SERIAL DATA CLOCK. In other words the MAIN SYSTEM is the general "master" in this communication system, and the PANEL SYSTEM is the "slave".

This means, that if the MASTER SYSTEM for some reason does not transmit SYNC and CLOCK, the panel system CANNOT receive or transmit data of any kind. The full consequence of such an error state is that NO COMMANDS can be entered into the MAIN CONTROL SYSTEM.

If such a situation exist for some time, and if the MAIN CONTROL SYSTEM itself is running normally, then after a timeout period the system will perform an automatic STATE CHANGE into the UNLOAD STATE.

Prior to each transmission cycle, the MASTER SYSTEM outputs a special trigger pulse at "TP3" on the MASTER CONTROL circuit board. This signal can be used to synchronise external equipment, such as an oscilloscope, with the serial transmission system.

The microcontroller is connected to the data and clock lines of the serial transmission system via the following circuit components;

The serial data CLOCK is OUTPUT from the MASTER CONTROL SYSTEM at TWO terminals: The "CK" and the "CK REMOTE". These terminals are driven from individual sections of the "sink driver" IC7. The inputs of the two drivers are driven in parallel from IC3 pin 31. The two output signals are completely identical. The CLOCK signal at the driver inputs can be observed at "TP1".

The serial DATA lines are also connected as two identical input/output terminals; The "DATA" and the "DATA REMOTE". The serial data outputs are driven from two sections of the "sink driver" IC7. The inputs of the two drivers are driven in parallel from IC3 pin 32. The two output signals from the MAIN SYSTEM are identical, and the driver input can be observed at "TP2". When observing the signals directly at the outgoing terminals, the MASTER SYSTEM output is seen in combination with the actual DATA INPUT coming from the connected panels. At these measuring points the signals might appear somewhat different from the internal "TP2"-signal.

The serial data INPUT is obtained through "Schmidt trigger" inverters connected between the DATA input/output terminals and the microcontroller. The local panel input is fed to IC3 pin 35, and the REMOTE panel is fed through a three state busdriver in IC11. The controller reads the inputs to IC11 as if it was reading data from an external memory.

The reason for having two CLOCK outputs and two DATA input/outputs, is to establish an insulation between the LOCAL panel and the REMOTE panel. In this manner a short circuit in the external wiring, will have NO effect on the function of the LOCAL front-panel.

All other functions of the MASTER SECTION of the serial transmission system are performed by the controller software. This includes generation of the SYNC SIGNAL, the CLOCK signal, the serial DATA signal, and the READING of serial data from both LOCAL and REMOTE panels.

(For further information on this subject, consult the chapter: "The SERIAL TRANSMISSION SYSTEM").

4.5 The generation of the CONTROL OUTPUTS:

The ten machine CONTROL OUTPUTS are set to "ON" (= + 15 V) or OFF (= 0 V) according to the required machine function at any time.

The signals are the direct output of IC4 at the MAIN CONTROL circuit board. This IC is a serial input/parallel output device. The input side is operating at a + 5 V supply, and the output side is operating at + 15 V.

At the input side of IC4 the microcontroller (by software) generates a clock (IC4 pin 4), and a serial data signal (IC4 pin 14). These two signals transmits the new ON/OFF setting into an internal shift register of IC4. The controller is actually transmitting 16 data bits to the register, but the first 6 of these are shifted out (lost) again, as the register is only 10 bits long. (The reason for this is to simplify the controller software).

At the end of this serial clocking sequence, the programme generates a "strobe signal" (IC4 pin 7). This signal results in an internal parallel transfer between the serial shift register and the output latch register. The result of this action is that all outputs will change instantly, and a new output is now controlling the machine functions. The timing of the serial load of the shift register is shown in fig. 5.

NOTE ! In order to observe these signals, it is necessary to trigger an oscilloscope by the CLOCK signal. Setting the time base to a sweep time of 500 us (50 us/div), the 16 clock cycles can be displayed when the scope is triggering at the first "0" to "1" of the first clock pulse. The signal can ONLY be observed when the MAIN CONTROL is changing one or more of the control outputs.

To obtain this, alternate between two or more machine states, or observe the signals during the brake sequence of a GOTO function.

What outputs that are set at what time is shown in fig.6 and is also described in the chapters dealing with the LOGIC STATES, and the STATE CHANGES between logic states.

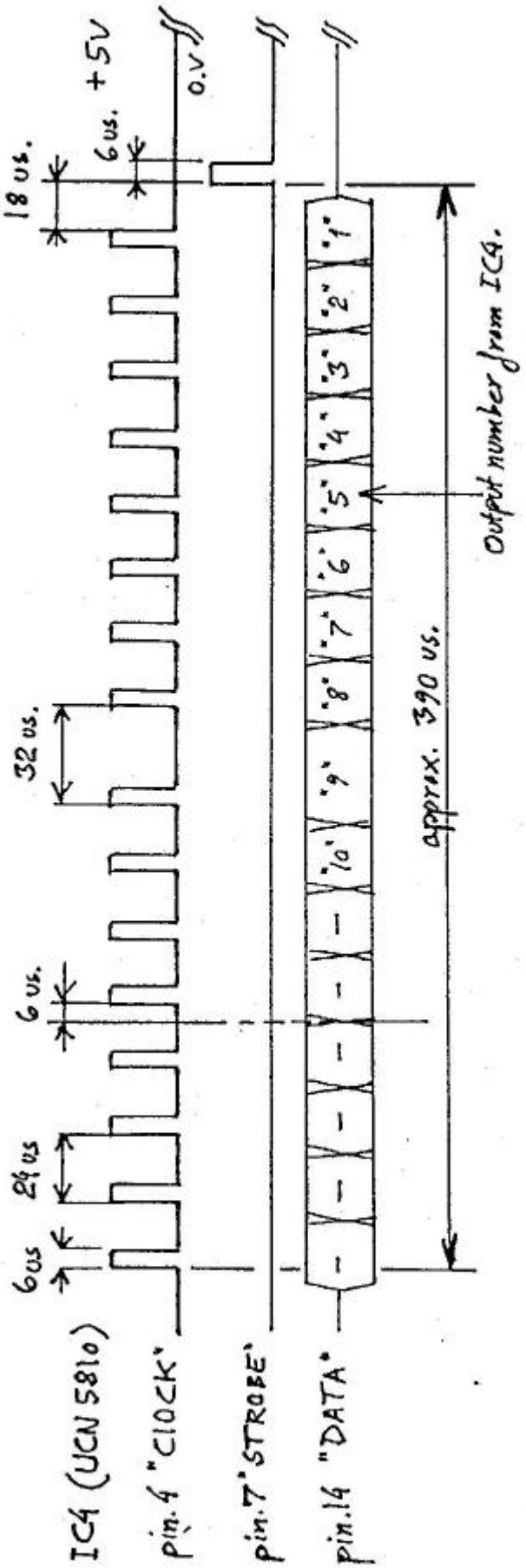

Fig. 5 Clock, strobe and data for the setting of CONTROL OUTPUTS.

	IC4, pin nr.:	17	18	1	2	3	8	9	10	11	12
	Control Outputs:	Record ON.	Erease ON.	Slow take-up.	Supply motor OFF	Capstan ON.	"C0"	"C1"	"A0"	"A1"	Take-up motor OFF.
logic states.	UNLOAD	0	0	0	X	0	X	0	0	0	X
	SLOW Take Up	0	0	X	X	0	X	0	0	0	X
	DUMP	0	0	0	X|0	X	X	X	0	0	X
	Edit Dump	0	0	0	X|0	X	0	X	0	0	X
	STOP	0	0	0	0	0	X	0	0	0	0
	FW. ≫	0	0	0	0	0	X|0	0	0	X	0
	RW. ≪	0	0	0	0	0	X|0	0	X	0	0
	VARi.W.	0	0	0	0	0	X|0	0	X	X	0
	PLAY	0	0	0	0	X	X	X	0	0	0
	RECORD	X	X	0	0	X	X	X	0	0	0
	PLAY Pause	0	0	0	0	0	0	X	0	0	0
	Record Pause	0	0	0	0	0	0	X	0	0	0
	GO-TO	0	0	0	0	0	X|0	0	X|0	X|0	0
	E-Brake.	0	0	0	0	0	0	0	X|0	X|0	0

"0": 0. Volt
"X": +15 Volt.
"X|0": 0. Volt or +15V. depending upon state-activity.

Fig.6 The setting of the CONTROL OUTPUTS.

4.6 The FUNCTION of all LOGIC STATES.

The actual activities performed in each LOGIC STATE varies from state to state. Some states will setup a static drive situation for the machine, and are then just waiting for a new allowed KEY or KEY COMMAND. Other states are busy performing some type of function, and at a certain rate they look for any new activation of a KEY or a KEY COMMAND coming from the PANEL SYSTEM.

The following descriptions gives a short specification of WHAT activities are performed in the different primary LOGIC STATES.

The descriptions are using the following shortforms for key commands:

("Name" - KEY : Means: If activated by a single key action)
("Name" - COMMAND: Means: Activation of more keys, or combined keys).

```
STOP:    The STOP KEY.
RW:      The REWIND KEY.
FW:      The FORWARD KEY.
PAUSE:   The PAUSE KEY.
VARI:    A VARIWIND COMMAND...........Keys: EDIT+FW or EDIT+RW
PLAY:    The PLAY KEY.
PLPAUS:  A PLAY PAUSE COMMAND.........Keys: PAUSE or PLAY + PAUSE.
REC:     The RECORD COMMAND...........Keys: REC + PLAY.
RCPAUS:  The RECORD PAUSE COMMAND.....Keys: REC + PLAY + PAUSE.
                                       or:  PAUSE if already in REC
EDIT:    The EDIT KEY.
GOTO:    A GOTO COMMAND...............Keys: GOTO KEY, single/double act
DUMP:    The DUMP COMMAND.............Keys: EDIT + PLAY.
ANY-KEY: A SOME KEY ACTIVE COMMAND.
   Keys: ALL  keys that are NOT accepted as individual  commands
         in the current state. These keys are ORED into ANY-KEY.

STTPL:   The STOP to PLAY COMMAND.....Keys: STOP + PLAY.
         (is also used for the RECORD to PLAY change over).
```

In case that a KEY activation immediately is followed by a state change, this is indicated as:

"DIRECT CHANGE ON : "

If the KEY activation is stored as a pending command, this is indicated as:

"PENDING COM. ON : "

A PENDING COMMAND is a command which is stored inside the microcontroller for use when the execution of the present state has ended. (Only the last received command is remembered by the control system).

The "testing for KEY input" implies that the MAIN CONTROL SYSTEM repeatedly is performing a serial transmission to/from the connected PANEL (or PANELS). The transmission is performed each approx. 7 ms, corresponding to a maximum rate of 142 serial transmissions per second. This rate will change somewhat depending upon the actual activity in the MAIN SYSTEM. In worst case the transmission intervals will be approx. 20-25 ms, which appears at the end of a search function in the GOTO state. For further information please consult the chapters concerning the SERIAL TRANSMISSION SYSTEM, and the SELF TEST FUNCTIONS.

The "changing of status" implies that the system at the same repetition rate is testing for CHANGES in the following:

TAPE TENSION, SELECTED TAPE SPEED, and TAPE MOTION DIRECTION.

Status from the front PANEL(s) which requests a change in:

REMOTE PANEL ON/OFF, TAPE TIMER ON/OFF, and TIMER RESET.

The TAPE TIMER and the TAPE SPEED MEASUREMENT are ALWAYS ACTIVE, as these functions are implemented using a real time interrupt technique. The selection between the display of either TAPE TIMER or TAPE SPEED is performed directly by the PANEL SYSTEM.

As the MAIN CONTROL SYSTEM controls the machine using the 10 machine control outputs, the corresponding states of these outputs are indicated. Only outputs that are ON are mentioned in the text. The "ON" state is present when the output is at + 15 volts, all signals NOT mentioned are "OFF" = 0 volts.

The UNLOAD state:

```
ACTIVITY           : Testing for KEY inputs, and status changes.
DIRECT CHANGE ON   : ANY-KEY, EDIT, DUMP.
PENDING COM.  ON   : None.
CONTROL OUTPUT     : "Supply motor off".
                     "Take up motor off".
                     "C0".
```

The SLOW TAKE UP state:

```
ACTIVITY           : Testing if "ANY-KEY" is still  activated, and
                     status changes.
DIRECT CHANGE ON   : The release of "ANY-KEY"
PENDING COM.  ON   : None.
CONTROL OUTPUT     : "Supply motor off".
                     "Take up motor off".
                     "Slow take up".
                     "C0".
```

The DUMP state:

```
ACTIVITY           : Setting the supply motor OFF or ON depending
                     upon if the tape tension is OFF or ON.
                     (Is OFF if tension is OFF).
                     Testing for KEY input, and status changes.
DIRECT CHANGE ON   : STOP.
PENDING COM.  ON   : None.
CONTROL OUTPUT     : "Supply motor off" (is either ON or OFF).
                     "Take up motor off".
                     "Capstan on"
                     "C0".
                     "C1".
```

```
The EDIT DUMP state:
-------------------------------------------------------------------
ACTIVITY           : Setting the supply motor OFF or ON depending
                     upon if the tape tension is OFF or ON.
                     (Is OFF if tension is OFF).
                     Testing for KEY input, and status changes.
DIRECT CHANGE ON   : ANY-KEY, STOP, DUMP.
PENDING COM.  ON   : "Supply motor off" (is either ON or OFF).
CONTROL OUTPUT     : "Supply motor off" (is either ON or OFF).
                     "Take up motor off".
                     "Capstan on"
                     "C1".

The STOP state:
-------------------------------------------------------------------
ACTIVITY           : Testing for KEY inputs, and status changes.
DIRECT CHANGE ON   : FW, RW, PLAY, REC, PAUSE, PLPAUS, RCPAUS,
                     VARI, GOTO, EDIT, STTPL.
PENDING COM.  ON   : None.
CONTROL OUTPUT     : "C0".

The FORWARD WIND, REWIND, and the VARIWIND states:
-------------------------------------------------------------------
ACTIVITY           : Performing control of the TAPE LIFT in/out.
                               If tape speed < 55"/sec.: LIFT IN.
                               If tape speed > 60"/sec.: LIFT OUT.
                     Testing for KEY input, and status changes.
DIRECT CHANGE ON   : STOP, FW, RW, VARI, PLAY, PAUSE, PLPAUS, GOTO
PENDING COM.  ON   : None.
CONTROL OUTPUT     : "A1" :If in FORWARD.
                     "A0" :If in REWIND.
                     "A0","A1" :If in VARIWIND.

The PLAY state:
-------------------------------------------------------------------
ACTIVITY           : Testing for KEY input, and status changes.
DIRECT CHANGE ON   : STOP, PAUSE, FW, RW, VARI, GOTO, RCPAUS, REC.
PENDING COM.  ON   : None.
CONTROL OUTPUT     : "Capstan on".
                     "C0".
                     "C1".

The RECORD state:
-------------------------------------------------------------------
ACTIVITY           : Testing for KEY input, and status changes.
DIRECT CHANGE ON   : STOP, PAUSE, FW, RW, VARI, GOTO, PPAUS, STTPL
PENDING COM.  ON   : None.
CONTROL OUTPUT     : "Capstan on".
                     "Record on".
                     "Erase on".
                     "C0".
                     "C1".

The PLAY PAUSE state:
-------------------------------------------------------------------
ACTIVITY           : Testing for KEY input, and status changes.
DIRECT CHANGE ON   : STOP, PAUSE, PLAY, FW, RW, VARI, GOTO, RCPAUS
                     REC, EDIT.
PENDING COM.  ON   : None.
CONTROL OUTPUT     : "C1".
```

The RECORD PAUSE state:

```
ACTIVITY           : Testing for KEY input, and status changes.
DIRECT CHANGE ON   : STOP, PAUSE, PLAY, FW, RW, VARI, GOTO, REC,
                     PLPAUS, EDIT.
PENDING COM.  ON   : None.
CONTROL OUTPUT     : "C1".
```

The GOTO state:

```
ACTIVITY           : Searching for the requested REF. POSITION.
                     Controlling the TAPE LIFT.
                     Testing for KEY input, and status changes.
                     NOTE: The "Timer Reset" and the Timer on/off"
                           are disabled during the GOTO state.
DIRECT CHANGE ON   : STOP, FW, RW, GOTO.
                     (If changing from GOTO ZERO to GOTO LAST,
                      or GOTO LAST to GOTO ZERO, the change can
                      ONLY be observed provided that the LAST
                      position ref. is NOT zero !).
PENDING COM.  ON   : PLAY, PAUSE, PLPAUS, VARI.
CONTROL OUTPUT     : "A0" :on/off depending upon search direction.
                     "A1" :on/off depending upon search direction.
```

Note ! When the current tape position is approaching the GOTO ref.pos, BOTH "A0" and "A1" will be "pulsing" in order to follow the search "braking slope".

The EBRAKE state:

```
ACTIVITY           : Braking using WIND MOTORS until speed = zero.
                     Zero speed is detected as a change in tape
                     motion direction.
                     Controlling TAPE LIFT in/out.
                     Testing for KEY input, and status changes.
DIRECT CHANGE ON   : FW, RW, GOTO.
PENDING COM.  ON   : STOP, PLAY, PLPAUS, VARI.
CONTROL OUTPUT     : "A0" :on/off depending upon brake direction.
                     "A1" :on/off depending upon brake direction.
```

4.7 The STATE CHANGES between LOGIC STATES.

In general a STATE CHANGE between two LOGIC STATES will be the result of one of the following events:

1. A KEY activation or a KEY COMMAND from the PANEL SYSTEM.
2. The REMOVAL of TAPE TENSION.
3. The ESTABLISHMENT of TAPE TENSION.
4. An ELECTRICAL BRAKING action has stopped the tape motion.
5. The GOTO function has reached the requested reference position.

The following chapters give a short description of those state changes which involves some type of special activity. It is important to notice that most of these changes has a "dynamic" character, which means that the involved control signals will differ in time depending upon the mechanical state of the machine. As a consequence of this, it might be difficult to verify these activities.

The change from: UNLOAD to: a "LOADED" state:

The change is obtained by pressing ANY KEY, except for the "EDIT" key.

At the activation of ANY KEY, the machine will enter the SLOW TAKE UP state. In this state the rewind motor will pull softly in order to obtain tape tension. If tension comes ON, the next state will be in relation to the activated key. In this manner, the state SLOW TAKE UP will last only as long as it takes to obtain tape tension.

The change from: a WIND FUNCTION to: STOP, PLAY, RECORD or PAUSE:

At the activations of these keys during a wind function, the EBRAKE state is entered and an electrical braking action is performed in order to stop the tape motion. The braking activity will last until the tape motion direction is changing. At the precise point in time when the direction is changing, the tape speed is zero, and the braking activity is immediately stopped.

If, for some reason, the tacho system CANNOT detect this change in direction, the tape movement will PASS zero speed, and continue WINDING (at reduced power) in the OPPOSITE DIRECTION.

The change from: RECORD to: PLAY or from: PLAY to: RECORD:

During the state change from RECORD to PLAY, the MAIN CONTROL performs a "RECORD DROP OUT" function. This implies that the system will set "ERASE" to OFF, and keep "RECORD" ON, for a time corresponding to the tape travelling time from the erase head to the record head.

During the state change from PLAY to RECORD, the MAIN CONTROL performs a "RECORD DROP IN" function. This implies that the system will set "ERASE" to ON, for a time corresponding to the tape travelling time from the erase head to the record head, and then "RECORD" will be set to ON.

In both cases the tape travelling time from the erase head to the record head, is implemented as a combination of a fixed time delay, and a delay directly proportional to the actual tape speed.

If, for some reason, the tacho system is NOT counting, the machine will enter a self locking state during the tacho related part of drop in or drop out.

If the error is in the tacho system, turn OFF the machine power and turn ON again to re-establish control of the machine.

If the error is due to some other reasons, for instance a not running capstan motor, just TURN the tacho wheel by hand (approx. 1-2 revolutions), and the machine will be back in control.

The change from: STOP to: FORWARD WIND or REWIND:

When entering these two wind functions FROM STOP ONLY, the MAIN SYSTEM performs a measurement of the tape acceleration. The result of this measurement is used by the GOTO function, in order to select the braking distance when searching towards a position reference.

If no wind function is performed since the machine left the UNLOAD state, the braking distance will be set to the highest value.

The change from: GOTO to: STOP, PLAY, PLAY-PAUSE or VARIWIND:

This change of state is normally preceded by a search activity performed by the GOTO function in the MAIN CONTROL SYSTEM.

If however, the tape happens already to be located at the requested position reference and stopped, or if the TAPE TIMER is set to OFF, then the KEY activation is ignored.

It is also important to notice, that immediately after power ON, the "LAST" reference position is initiated to position ZERO.

The GOTO function itself is a rather complicated function, which can be regarded as a transfer state between two other states. During the execution of the GOTO search, the system will accept some types of KEY activations as pending commands. Only the last entered KEY will be remembered as a pending command. The precise command capability of the GOTO state is described in the chapter: "The FUNCTION of all LOGIC STATES".

In order to understand the GOTO function, it is important to keep in mind, that the GOTO function can be activated during the following conditions:

1: The tape can be STOPPED, and located at the ref. position.

2: The tape can be moving fast or slow, at, or away from the ref. position.

3: The tape can be moving too fast in either direction. The speed can be so high, that the machine cannot stop before the ref. position.

4: The pos. reference can be changed from "LAST" to "ZERO", or from "ZERO" to "LAST", at any time during the execution of the search function.

The following description is a "logic" explanation of WHAT the GOTO search activity consist of: (Any detailed explanation concerning HOW the function is implemented, is outside the range of this document).

1. For each repetition of the "state change loop", the GOTO functional programme will perform the following:

1.1 Activate the ordinary tape speed measurement system.

1.2 Control the TAPE LIFT in relation to the current tape speed.

1.3. Calculate the direction (FW/RW) to the ref. position.

1.4. Test if the current tape moving direction is correct.

If the direction is wrong: Activate the EBRAKE function to STOP the tape movement. Then search restart.
If the direction is correct: Continue.

1.5. Calculate the distance (in tape-time) to the ref. position.

1.6. Test if the distance is lower than the braking limit.

If it is LOWER: Continue with the activities in point 2.
If it is HIGHER: Activate a wind motor in direction of the reference position.

1.7. Repeat from point 1.2.

2: If the direction is correct, and the distance is LOWER than braking limit, then:

2.1. Check that the distance is lower than the braking limit.

If the distance becomes HIGHER than the braking limit, the activities at point 1.1 will be resumed.

2.2. Stop the ordinary tape speed measurements.

2.3. Measure the current tape speed by measuring directly the half period time of the tacho signal.

2.4. Control the TAPE LIFT in relation to the distance to the ref. position.

2.5. Perform a calculation of a number proportional to the square of the tape speed. Compare this number to the distance to the ref. position.

If the number is HIGHER than the distance:
The speed is HIGH. Else: The speed is LOW.

2.6. If the speed is LOW, it activates a wind motor in the direction of the ref. position.

If the speed is HIGH, it activates a wind motor in the braking direction.

2.7. If the distance to the ref. position becomes ZERO, and the tape speed is lower than 5 "/sec the search is STOPPED, and the next logic state is entered.

If the "A0"/"A1" signals are observed using a oscilloscope during a search function, it will clearly indicate when the braking limit is crossed (This of cause provided that the initial distance was higher than the brake limit).

If the "TP3. SYNC." is observed, it can be seen that the rate of the "state change looping" is lowered as the tape speed is lowered, when the tape is approaching the ref. position.

4.8 The FUNCTIONAL PART of some of the SELF TEST FUNCTIONS.

During SELF TEST MODE the MASTER CONTROL SYSTEM performs some special functions, in order to verify the SERIAL TRANSMISSION SYSTEM and in order to allow for different service activities concerning the WIND MOTORS, the CAPSTAN MOTOR, and the PINCH-ROLLER/TAPE LIFT SYSTEM.

For further information on these functions please refer to the chapter: "RUNNING the SELF TEST FUNCTIONS".

5. The PANEL CONTROL SYSTEM:

The PANEL CONTROL SYSTEM is described in the following chapters:

5.1: The PANEL CONTROL SYSTEM in general.

5.2: The DETECTION of all types of KEY COMMANDS.

5.3: The NUMERIC DISPLAY and LED indicators.

5.4: Setting the values of the TIMER and SPEED displays:

5.5: The SLAVE SECTION of the SERIAL TRANSMISSION SYSTEM.

5.6: The SELF TEST FUNCTIONS.

The following chapters gives a short and strongly simplified explanation of how some of these function are implemented. The purpose of these explanations is to provide a basic understanding of how different types of hardware errors might affect the machine functions. All hardware references are referring to the PANEL CONTROL SYSTEM schematic found on diagram # 2393.

5.1 The PANEL CONTROL SYSTEM in general:

The PANEL CONTROL SYSTEM is equipped with a programmed micro-controller IC5, type 8749. This controller has 2 K bytes of "on chip" programme memory, but is in all other aspects equivalent to the controller used in the MAIN CONTROL SYSTEM. The controller is operating at a crystal controlled clock frequency of 9.8304 MHz. (The same frequency as used in the MAIN CONTROL SYSTEM).

As this controller is executing an INTERNALLY STORED programme, the actually used programme addresses and instruction codes CANNOT be accessed from the outside of the controller IC. Therefore the ONLY signal which indicates that the controller is running is the "ALE" signal at IC5 pin 11. This signal is always present if the crystal oscillator is running, and is the result of an internal 15-division of the oscillator frequency. The correct period time of the "ALE" signal is 1.525 us, the "HIGH" part of the period is 0.360 us, and the "LOW"-period is 1.165 us.

In order to check that the clock oscillator is running correctly, check that the "ALE" signal is matching the above given specifications. Using this method, the oscillator itself is not disturbed by the load of the measuring equipment in use.

If there is no fatal IC errors present, the clock is running, and the controller appears NOT to execute the programme, the possible cause might be:

1: The DC supply voltage is below + 4.75 V, or it contains ripple.
2: IC3 pin 7 "EA" is not at 0 V.
3: IC3 pin 4 "RESET" is permanently at 0 V. (Must be above +0.6 V)
4: IC3 pin 5 "SINGLE STEP" is at 0.V. (has normally NO connection)

5.2 The DETECTION of all types of KEY COMMANDS.

In order to read keys and switches, the microcontroller is connected in a combination of "direct" inputs, and "indirect" inputs.

5.2.1 The indirect key inputs:

These inputs are obtained via the data selector IC4 type 4519. The data selector is controlled by IC5 pin. 35 which selects between the "Y0,Y1,Y2,Y3" and the "X0,X1,X2,X3" inputs. When IC5 pin. 35 is at "HIGH" = approx.+ 5 V, the X inputs are transferred to IC5 pins. 21 through 24. When IC5 pin. 35 is "LOW" = approx. 0 V, the Y inputs are selected.

As the microcontroller is reading the keys by executing a programme, this programme is setting the IC5 pin. 35 "HIGH" to read the "X" inputs, and "LOW" to read the "Y" inputs. The duration in time in which the controller reads the "X" inputs is always 13 us, but the number of readings in a panel sync cycle, is depending upon the actual state of the system.

It is important to notice, that a repeating reading activity of the keys, normally takes place only if the microcontroller is running AND synchronising with the MAIN CONTROL SYSTEM. The ONLY exception from this is found in PART-1 of the self test functions, during this mode, the panel locally reads the keys with intervals of 260 ms, and there is NO synchronisation with the MAIN CONTROL SYSTEM.

If it is required to check the function of the IC4, and/or the keys connected to IC4, then use the following procedure:

No matter how much of the system is operating, do the following:

1: Connect channel 1 of a two channel oscilloscope to IC4 pin 9. (2 V/div.)
2: Set the scope to trigger on Channel 1, DC, POSITIVE (level approx. 2 V.)
3: Set the oscilloscope timebase to 2 ms/div.
4: Connect channel 2 to the SERIAL TRANSMISSION CLOCK, the "CK" signal.
5: Switch ON the machine, and leave the machine in UNLOAD. (This will always be the state of the machine, if the panel system is not working at all, and it is also the default state after power ON).
6: If the PANEL CONTROL SYSTEM is running, the oscilloscope display will show the signal given in figure 7. The length of the "HIGH" period at channel 1 must be approx. 13 us, and the intervals between the pulses will be approx. 7 ms.

NOTE: These intervals are NOT ALWAYS 7 ms, as the panel sometimes is calculating either the tape timer or the tape speed value for display purposes. When such a calculation takes place, the controller is "missing" a SYNC.SIGNAL from the MAIN CONTROL SYSTEM, and the 13 us. impulse will be located DURING the ongoing transmission OUT of the MAIN SYSTEM.

If the conditions described in point 6 are NOT present, then the PANEL is NOT synchronising with the MAIN CONTROL SYSTEM. Then skip point 7, and continue with point 8.

7: Press "STOP", and if there is tape on the machine, the MAIN CONTROL SYSTEM will pass through the state "SLOW TAKE UP", and enter the state: "STOP". Now the signal will be as given in figure 8. Note that the 13 us. high pulsing signal at IC4 pin 9, is appearing TWICE each 7 ms.

8: Switch OFF the machine, connect "JM2", and switch ON again. Remove the "JM2" connection, and set the "DISPLAY switch" to position "TIMER".

The machine is now in SELF TEST MODE, PART-1. Now the signals will be as given in fig. 9. In this MODE, the repetition rate of the signals on channel 1 is approx. 260 ms, and the 13 us. high pulsing signal at IC4 pin 9 is appearing FOUR times each 260 ms.

(In this situation the clock signal on channel 2 is running free in relation to channel 1, as the panel is NOT in sync with the MAIN SYSTEM).

9: Now set the "DISPLAY switch" to position "SPEED", this selects PART-2 of the SELF TEST FUNCTION. Now the signals will be as shown in fig 10. The panel is now synchronising again, but the cycle interval is extended to 10 ms, and the 13 uS signal at IC4 pin 9 will appear TWICE.

(If the cycle interval is NOT 10 ms, but still 7 ms as in the "STOP" state, then the MAIN CONTROL SYSTEM has NOT detected that the panel is in SELF TEST MODE! The reason for this may be a fault in the serial transmission system. If so, please refer to the chapter "The SERIAL TRANSMISSION SYSTEM").

10: If the system is running in self test PART-2, continue with no further changes.

If it is NOT running, return the "DISPLAY" selector to "TIMER" and continue with this setting. (The checks are now performed in self test PART-1, this results in a lower repetition rate).

Any key connected to IC4 can be checked using the following procedure, and by measuring at different positions in the circuit.

If the actual "X" input to the controller is to be checked, this must be done WHILE the IC4 pin 9 is "HIGH" (and pin 14 is "LOW"). As this is only the case for approx. 13 us, the scope timebase must be set to 2 us/div, while observing the signals at the "Z" output terminals of IC4 pin 10 through 13. It must also be checked that these signals are reaching the pins 21 through 24 at the microcontroller IC5.

Activate the different keys, and check that the corresponding changes in logic levels are present.

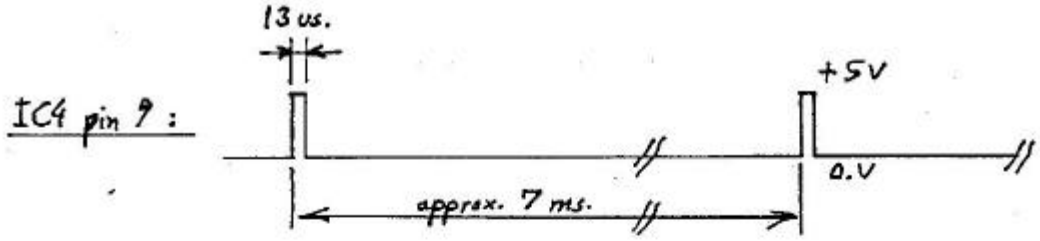

Fig. 7. IC4 pin 9 while machine in UNLOAD.

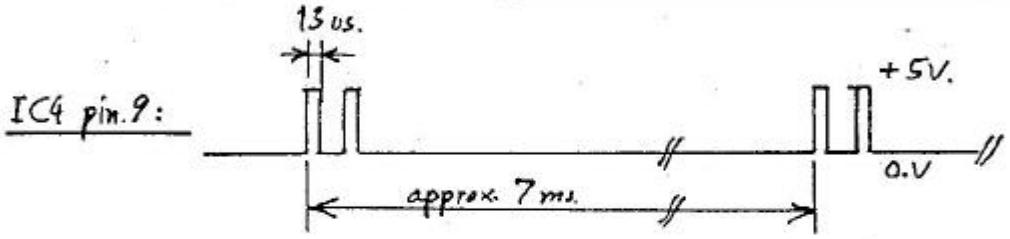

Fig. 8. IC4 pin 9 while machine in STOP.

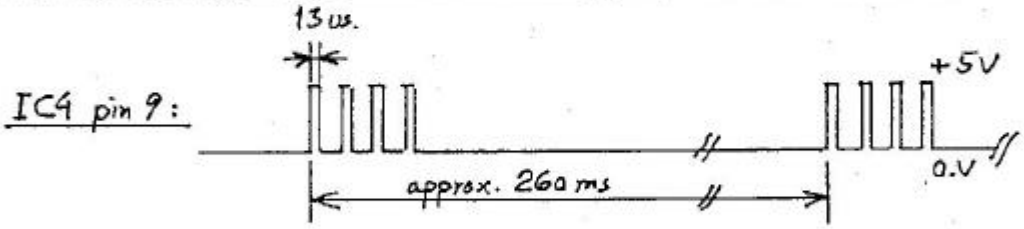

Fig. 9. IC4 pin 9: while machine in SELF TEST PART-1.

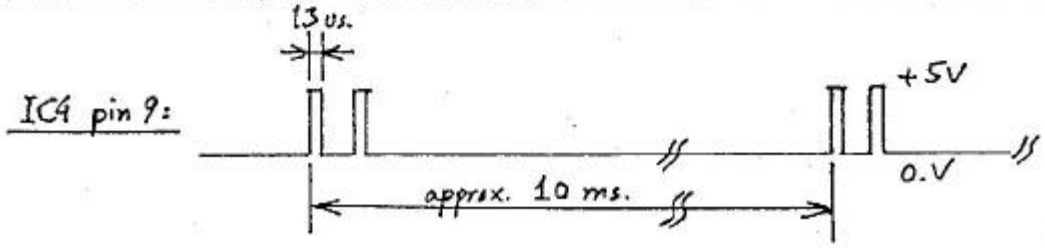

Fig. 10. IC4 pin 9. while machine in SELF TEST PART-2.

5.2.2 The direct key inputs:

Two keys "TIMER RESET" and "TIMER ON/OFF", and one selector the "REMOTE KEYBOARD ON/OFF", are connected directly to inputs on IC5 at pins 1, 39 and 36. It is not possible to measure any reading activity on these inputs, but the external hardware can be checked simply by measuring the level changes at the inputs of IC5, while activating the keys and changing the setting of the selector.

5.2.3 The key hardware in general:

All inputs (including the serial clock and data) are equipped with a high value resistor of 1 Mohm in serial with the input of the active circuit component. These resistors protects the inputs from accidental high voltage damage due to electrostatic discharges through keys or external wiring.

If measurements are carried out around these circuit components, it is important to notice the effect of the protection resistors. Using a measuring probe with an input resistance of say 1 Mohm, this will cause a measuring fault of 50% if attempting to measure direct at the IC inputs.

5.2.4. The software function of the key detection:

The PANEL detects all types of both single and multiple key commands. The PANEL does this by "reading" all KEYS and SWITCHES, once for each synchronisation with the MAIN SYSTEM.

In order to prevent electrical noise or accidental short activations of keys from entering the machine, the PANEL requires that the KEY or SWITCH is detected as an identical pattern for two succeeding synchronisations with the MAIN SYSTEM. This means that a key must be activated for approx. 25 ms in order to be accepted as a valid key activation.

5.3 The NUMERIC DISPLAY and LED indicators:

5.3.1 The 7-segment displays of the NUMERIC DISPLAY:

The 7 segment LED displays are primary driven by IC6 (type 7212 AM). This IC is connected to the data bus of the microcontroller, and is controlled by the "- WR signal" from IC5 pin. 10. The microcontroller is transferring data to IC6 by executing a "WRITE TO EXTERNAL MEMORY" instruction. During this operation, the controller software combines the"digit addr" with the "digit data" into a single byte, this byte is then written into IC6 strobed by the "- WR signal". Driver signals to the leftmost and rightmost "decimal points" are also combined into the same byte and are set up using the same method.

As the actual signal pattern on the above mentioned terminals is very complex to check in an absolute manner, it is recommended to use the following procedure:

1: First check that IC6 has + 5 V. at pin 1 and 5, and that pin 35 and 36 is at 0 V.

2: If the fault is a constant light in one of the segments in one of the four display units: Remove IC6 from its socket.

If the faulty segment is still on, a faulty connection in the PC board might be present in some way (A DC-current is flowing from one of the display unit terminals to ground).

If the faulty segment is now OFF, the IC6 is likely to be defective.

3: If the fault is a missing light in a single segment, remove IC6 from its socket and do the following:
Insert a resistor of 680 Ohm between ground and the corresponding segment terminal in the IC6-socket.

If the faulty segment now lights up, the fault is likely to be in IC6.

If not, the display unit is defective or the segment connection in the PC board is disconnected.

4: If there is no light in a complete display unit, check that + 5 V is present at pin 3 and 8 of the unit. This type of fault can also be caused by a defective IC6, or IC5.

5: If the fault appears as if only some of the four digits are updated, or if only a limited number of numeric codes can be shown, no matter the digit position, then the following check is recommended:

Connect an oscilloscope to trigger on IC5 pin 10. The "-WR" signal.

Select "DISPLAY": TIMER, and position the tape so that the display shows a combination of zeros, a "7" digit and an "8" digit. This is present at a display such as: ".07.08." or ".08.07.". If the fault makes it difficult to obtain this display, try to move the tape slowly into a position where the displayed value is supposed to be as indicated.

Use a measuring channel on the scope to check that a trigger is present, use the same, or another measuring channel, to check that there is signal activity at IC5 pins 12 through 17 ("DB0...DB5"). If the timer value is one of the above specified, ALL data bits must operate. If one or more signals are stuck at "HIGH" or "LOW", the fault may be in IC5 or a faulty connection in the PC board.

5.3.2 The other indicators in the NUMERICAL DISPLAY:

These indicators consists of different segments and "DP" indicators, located in the same display units as used for the timer display. All these indicators are driven indirectly by outputs from IC5. In case of faults in these indicators, set the machine into a situation where the indicator is known to be either ON or OFF, and then check the levels in the involved part of the circuit.

Please note that some indicators are driven by discrete transistors, which are driven directly by outputs from IC5. These outputs (IC5 pin 19, 32, and 33) will be at approx. + 0.7 V in the "HIGH" state, corresponding to light in the associated indicator.

All other outputs from IC5 goes to approx. + 5 V in the "HIGH" state, but the pins 19, 32 and 33 are clamped by the base emitter diodes of T1, T2 and T3.

In the "LOW" state, the low output impedance of the IC5 outputs will clamp the current from R34, R35 and R36 to ground. During this condition the output level is approx. 0.1 to 0.2 volts, and there will be no current flow in the base emitter diodes. The transistors will be OFF and the display indicators will be OFF.

5.3.3 The LED indicators:

A set of LED indicators are located next to the keys for "RECORD", "STOP", "PAUSE", and the "ZERO/LAST" for the "GOTO" key. These five indicators are driven by individual "sink drivers", which are controlled from pin. 27 through 31 of the microcontroller. To set an LED indicator ON, the controller sets the corresponding output to the "LOW" state.

If a LED indicator is to be tested independent of the actual outputs of IC5, remove IC5 from its socket, and all five LED's must be OFF. To set a LED to ON, simply connect one of the pins 27..31 to 0 V. If the problem consist of a LED which will not go ON, the above method can be used without removing IC5 from the socket.

The controller sets these LED's in relation to the status received from the MAIN CONTROL SYSTEM via the serial transmission system. (For further information please consult the chapter: "The SERIAL TRANSMISSION SYSTEM").

5.4 Setting the values of the TIMER and SPEED displays:

The basic values for these two types of displays are transmitted to the panel via the serial transmission system. The MAIN CONTROL SYSTEM is always transmitting the current values, and each type of value is transmitted twice. This means that the values transmitted in a sequence of transmissions will be TWO times the basic TIMER value followed by TWO times the basic TAPE SPEED value, TWO times the basic TIMER value, etc. etc. A status bit in the transmitted data is indicating to the panel what type of basic value is contained in the current transmission.

5.4.1 The TAPE TIMER VALUE:

At each fourth synchronisation with the MAIN CONTROL SYSTEM, the panel performs a calculation of the display values for the TAPE TIMER. The basic value transmitted is always a binary 16 bits word with an LSB-resolution of 1 SEC. The scaling of this value is done by the MAIN CONTROL SYSTEM, and is set in relation to the selected TAPE SPEED.

The PANEL CONTROL SYSTEM calculates The value of the HOUR digit, the * 10 MIN digit, the * 1 MIN digit, and the * 10 SEC, and * 1 SEC digits. As the display itself is not able to indicate higher values than 1 HOUR, the HOUR digit is set flashing whenever the tape timer value exceeds 1 HOUR, 59 MIN and 59 SEC.

The SIGN of the timer value and the 1/4 SEC. indicator (right to the * 1 SEC. digit) are set directly from status bits transmitted from the MAIN CONTROL SYSTEM. The 1/4 SEC. indicator is ALWAYS working, also when the ordinary tape timer is stopped by using the TIMER ON/OFF key or if the machine is in UNLOAD.

5.4.2 The TAPE SPEED VALUE:

At each eighth synchronisation with the MAIN CONTROL SYSTEM, the panel performs a calculation of the display values for the TAPE SPEED. The basic value transmitted is a binary word of 16 bits, representing the result of the tape speed measuring system located in the MAIN CONTROL SYSTEM.

The PANEL CONTROL SYSTEM first calculates the speed value in inches per second. It then calculates the digit values for the * 10"/sec, the * 1"/sec, the * 0.1"/sec, and finally the * 0.01"/sec.

The maximum displayed value is 99.22"/sec. This limit is given by the MAIN CONTROL SYSTEM, which sends the status "speed measure OFF" to the panel (Internally in the MAIN CONTROL SYSTEM the measurement is performed continuously).

5.5 The SLAVE SECTION of the SERIAL TRANSMISSION SYSTEM.

The panel section of the SERIAL TRANSMISSION SYSTEM is named the "SLAVE SECTION". This is due to the fact that the panel is both CLOCKED and SYNCHRONISED by the "MASTER SECTION" located in the MAIN CONTROL SYSTEM.

If for some reason, the MAIN SYSTEM is in a failure condition and therefore NOT able to provide the CLOCK and SYNC.SIGNAL, the panel will be "locked" in a programme loop trying to find the SYNC.SIGNAL. In such a situation the panel appears completely "dead", as no key commands can be transferred to the MAIN CONTROL SYSTEM, and NO displays can be obtained. (The only function possible will be the SELF TEST function PART-1).

The panel microcontroller is connected to the data and clock lines of the serial transmission system via the following circuit components:

The serial data CLOCK is input to a "Schmidt trigger" type of inverter, which drives IC5 pin. 6. This input (the "-INT" input) is NOT used to interrupt the controller, but is simply "polled" by the data transfer programme.

The serial DATA line is input to an inverter which drives IC5 pin. 3. At the same time the controller can output data using a "sink driver", which is connected in parallel to the serial data line. The data line driver is driven from IC5 pin 34.

All other functions of the slave section of the serial transmission system are performed by the controller software. This includes the tracking of the serial data CLOCK, detection of the SYNC.SIGNAL, receiving serial data from the MAIN CONTROL SYSTEM, and sending serial data from the PANEL CONTROL SYSTEM to the MAIN CONTROL SYSTEM. (For further information please consult the chapter: "The SERIAL TRANSMISSION SYSTEM").

5.6 The SELF TEST FUNCTIONS.

The PANEL CONTROL SYSTEM contains the primary programme functions for the SELF TEST FUNCTIONS. The connections "JM2", located under the flap, are used to activate the panel SELF TEST programmes. The terminals of "JM2" are coupled as a shorting to 0 V. of the driver signal for the rightmost decimal point. When the DC supply is switched on to the microcontroller, the controller starts up by executing an initialisation programme. During this execution, the controller "READS" the data bus, and if IC5 pin. 18. is found to be at "LOW" level, the controller enters the SELF TEST programmes.

For more detailed information on how to run the SELF TEST FUNCTIONS, and what is actually tested, please refer to the chapter: "RUNNING the SELF TEST FUNCTIONS".

6. The SERIAL TRANSMISSION system:

6.1 The SERIAL TRANSMISSION SYSTEM in general:

The SERIAL TRANSMISSION SYSTEM provides a TWO WAY transmission of data and status between the PANEL SYSTEM and the MAIN CONTROL SYSTEM. Data and status is transmitted in a serial form on a common bidirectional data line.

Data is clocked using a single common transmission clock generated by the MASTER CONTROL SYSTEM.

To transmit data in "serial form", means that only one "bit" of data (a logic "0" or a logic "1") is transmitted at a time.

The bidirectional (= "two-way") transmission is obtained by having the PANEL SYSTEM to SEND data in the first half period of the clock, and having the MAIN CONTROL SYSTEM to SEND data in the second half period of the same clock. When one of the systems is SENDING data, the other system is RECEIVING data. Fig. 11 shows a few cycles of the CLOCK signal and the relation to the transmitted data. When either MAIN SYSTEM or the PANEL SYSTEM is "receiving" data, the appropriate serial data driver is set to logic "0". In this state the "sending" system, depending upon what bit value to be transmitted, can drive the serial data line to a logic "1", or it can remain in the logic "0" state.

In order to synchronise the two control systems, the MAIN SYSTEM generates a "SYNC." signal at the clock line. The PANEL SYSTEM detects the SYNC.SIGNAL and performs the data transmission (SENDING and RECEIVING) controlled by the clock pulses, which are following the SYNC.SIGNAL. The complete transmission consist of 32 bits (= four bytes) send and received in BOTH directions.

The last byte sent by the PANEL CONTROL SYSTEM contains a four bit "VERIFY PATTERN". At the end of every transmission, the MAIN CONTROL SYSTEM is testing the received pattern. If the pattern is incorrect, it is assumed that the panel is either not present at all, or it has missed the SYNC.SIGNAL. If the MAIN CONTROL SYSTEM does not receive a correctly verified pattern within a specific number of transmissions, the MAIN SYSTEM will assume a general machine malfunction. It will then perform an automatic stop of any tape motion and enter the UNLOAD state.

6.2 The SYNC.SIGNAL and the DATA CLOCK:

Both these signals are generated by the MAIN CONTROL SYSTEM, and are send to the PANEL CONTROL SYSTEM via the "CK" line. Any remote panel is getting the same signal at the line named: "CK REMOTE".

The reason for having this SYNC.SIGNAL, is the fact that the programme execution in the PANEL CONTROL SYSTEM is ASYNCHRONOUSLY with the programme execution in the MAIN CONTROL SYSTEM. In order to perform a serial data transmission in synchronism with a common clock signal, the two systems need to be synchronised during the data transmission.

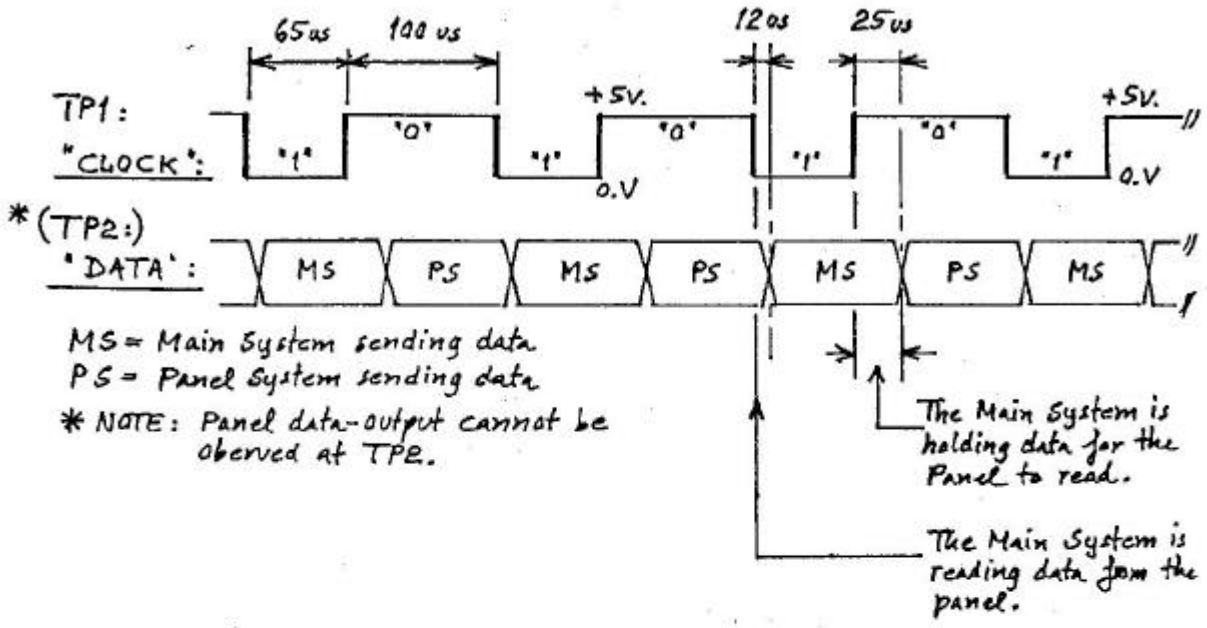

Fig.11 The timing of seriel clock and data.

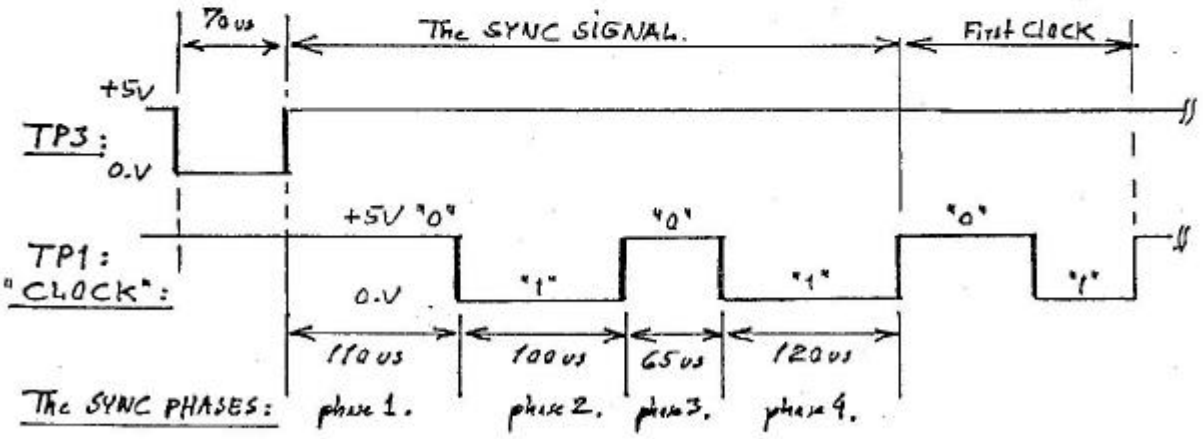

Fig. 12. The timing of the SYNC SIGNAL.

The reasons for the asynchronism are as follows:

1: The two microcontrollers in the control systems are operated by individual clock oscillators. (They do have the same frequency, but the phase is random, and the internal execution phase of the controllers is also completely random).

2: If the tape is moving, the programme execution in the MAIN CONTROL SYSTEM is frequently interrupted by both the TAPE TIMER FUNCTION, and the TAPE SPEED MEASUREMENT FUNCTION. These two types of interrupt activities forces an interruption of the programme execution. The current programme execution is then stopped, until the interrupt programme execution has ended.

   As these programme interrupts appears at random "positions" in the normal programme execution, any current controller activity can be "frozen" in a random state. The current activity will be resumed after a varying time period, and has NO effect on the transmitted status and data.

   This effect can be clearly seen when an oscilloscope is connected to the serial CLOCK or DATA lines WHILE THE TAPE IS MOVING. It is then impossible to perform ANY kind of detailed measurements in this situation.

3: When the PANEL CONTROL SYSTEM is performing a calculation of either the tape timer display values or the tape speed display values, the programme execution time necessary for these operations is so long (4 - 6 ms), that the MAIN CONTROL SYSTEM has started the next serial transmission BEFORE the panel starts to look for the SYNC.SIGNAL. The panel then needs to re-establish synchronism at the start of the next transmission.

The signal timing of the SYNC.SIGNAL is shown in fig. 12. This signal sequence is generated by a programme in the MAIN CONTROL SYSTEM, and the reasons for using this signal timing are the following:

1: As the MAIN CONTROL SYSTEM (which generates the signal) can be interrupted at ANY POINT IN TIME, then ANY part, of either the SYNC.SIGNAL or the following CLOCK and DATA signals, can be EXTENDED IN TIME in ANY state (the logical states: "0" or "1").

2: If such an interrupt occurs during ANY of the four "phases" of the SYNC. SIGNAL, the PANEL CONTROL SYSTEM must either ignore the sync. as NOT VALID, or it must detect the sync. correctly.

In practice, MAXIMUM ONE interrupt can take place during the duration of the SYNC.SIGNAL. If this happens in phase 1,2 or 4, the SYNC will be detected correctly.

If the interrupt takes place in phase 3, the panel will NOT accept the sync, and the actual transmission will be ignored. This is the ONLY interrupt position during the entire transmission, which will cause a transmission to be ignored.

If an interrupt takes place after the SYNC.SIGNAL and during the serial transmission of data, then the MAIN SYSTEM will freeze the CLOCK and DATA line and wait for the termination of the interrupt programme activity. The PANEL SYSTEM (which is already in sync. with the MAIN SYSTEM) will await the next change of the CLOCK signal, when this appears, both systems have resumed the synchronised transmission of serial data.

6.3 The logical representation of SYNC, CLOCK and DATA:

These signals are generated with identical representation at the CLOCK and DATA lines BETWEEN the MAIN CONTROL SYSTEM and the PANEL CONTROL SYSTEM.

The level used are:

1: "LOGIC 0" is implemented as a "HIGH" level (approx. + 5 V.).
2: "LOGIC 1" is implemented as a "LOW" level (approx. 0 V.).

When observing these signals at internal terminals in the two circuits, it is important to notice that after passing "Schmidt trigger" inverters, the logic representation is inverted. The used "SINK drivers" are NON inverting.

A special SERVICE TRIGGER SIGNAL is always generated by the MAIN CONTROL SYSTEM, this signal is available at "TP3". The signal is generated immediately before the generation of the SYNC.SIGNAL, and can be used to trigger an oscilloscope in order to perform measurements on the SERIAL TRANSMISSION SYSTEM. The timing relation between the SERVICE TRIGGER and the SYNC.SIGNAL can be seen at fig. 12.

6.4 The TRANSMITTED DATA:

The following list of STATUS and DATA, is a complete specification of the data format used in the SERIAL TRANSMISSION SYSTEM.

"Byte 0" is the first byte in the transmission. "Bit 0" is the first bit transmitted in a byte.

"Byte 0"/"Bit 0" is the first bit transmitted following the phase 4 of the SYNC.SIGNAL.

```
-------------------------------------------------------------------------
MAIN SYSTEM OUTPUT:                  = PANEL CONTROL OUTPUT:
(Input to PANEL).                    = (Input to MAIN SYSTEM).
------------------------------------ = ------------------------------------
                                     =
BYTE 0.    (The CLOCK: "0 phase")    = (The CLOCK: "1 phase").
- - - - - - - - - - - - - - - - - - - = - - - - - - - - - - - - - - - - - - -
                                     =
Bit 0 := If "0" : Tape timer value. = If "0" : Key "GOTO"    NOT activated
         If "1" : Tape speed value. = If "1" : Key "GOTO"    is  activated
                                     =
Bit 1 := If "0" : Speed value OK.   = If "0" : Key "EDIT"    NOT activated
         If "1" : Value NOT OK.     = If "1" : Key "EDIT"    is  activated
                                     =
Bit 2 := If "0" : 1/4 sec.LED: OFF  = If "0" : Key "REWIND"  NOT activated
         If "1" : 1/4 sec.LED: ON   = If "1" : Key "REWIND"  is  activated
                                     =
Bit 3 := If "0" : Sign.= Positive.  = If "0" : Key "FORWARD" NOT activated
         If "1" : Sign.= Negative.  = If "1" : Key "FORWARD" is  activated
                                     =
Bit 4 := If "0" : NOT in UNLOAD.    = If "0" : Key "RECORD"  NOT activated
         If "1" : IN UNLOAD.        = If "1" : Key "RECORD"  is  activated
                                     =
Bit 5 := If "0" : NOT in GOTO ZERO. = If "0" : Key "PLAY"    NOT activated
         If "1" : IN GOTO ZERO.     = If "1" : Key "PLAY"    is  activated
                                     =
Bit 6 := If "0" : NOT in GOTO LAST. = If "0" : Key "PAUSE"   NOT activated
         If "1" : IN GOTO LAST.     = If "1" : Key "PAUSE"   is  activated
                                     =
Bit 7 := If "0" : TIMER is ON.      = If "0" : Key "STOP"    NOT activated
         If "1" : TIMER is OFF.     = If "1" : Key "STOP"    is  activated
                                     =
-------------------------------------------------------------------------
```

If the machine is in UNLOAD (Byte 0, Bit 4 := "1"), then the PANEL CONTROL SYSTEM will "convert" any single key activation to a common command named "SOME KEY ACTIVE". The code for this command is "BB" in hexadecimal. This command is then transmitted in byte 0 replacing the code bit for the activated key.

```
-----------------------------------------------------------------------
MAIN SYSTEM OUTPUT:                 = PANEL CONTROL OUTPUT:
(Input to PANEL).                   = (Input to MAIN SYSTEM).
------------------------------------ = ---------------------------------
                                    =
BYTE 1.   (The CLOCK: "0 phase")    = (The CLOCK: "1 phase").
- - - - - - - - - - - - - - - - - - - = - - - - - - - - - - - - - - - - - -
                                    =
Bit 0 := If "0" : NOT in STOP.      = If "0" : No command
         If "1" : IN STOP.          = If "1" : Command: "GOTO ZERO"
                                    =
Bit 1 := If "0" : NOT in PAUSE.     = If "0" : No command
         If "1" : IN PAUSE.         = If "1" : Command: "GOTO LAST"
                                    =
Bit 2 := If "0" : NOT in RECORD.    = If "0" : No command
         If "1" : IN RECORD.        = If "1" : Command: "TIMER RESET"
                                    =
Bit 3 := If "0" : NOT in DUMP.      = If "0" : No command
         If "1" : IN DUMP.          = If "1" : Command: "SET TIMER ON"
                                    =
Bit 4 := If "0" : NO GOTO initiate. = If "0" : No command
         If "1" : INITIATE GOTO.    = If "1" : Command: "SET TIMER OFF"
                                    =
Bit 5 := If "0" : NOT USED.         = If "0" : No command
         If "1" : NOT USED.         = If "1" : Command: "SET RECORD"
                                    =
Bit 6 := If "0" : NOT USED.         = If "0" : No command
         If "1" : NOT USED.         = If "1" : Command: "PLAY FROM REC"
                                    =
Bit 7 := If "0" : NOT USED.         = If "0" : No command
         If "1" : NOT USED.         = If "1" : Command: "SET DUMP"
                                    =
-----------------------------------------------------------------------
```

```
-----------------------------------------------------------------------------
MAIN SYSTEM OUTPUT:                   = PANEL CONTROL OUTPUT:
(Input to PANEL).                     = (Input to MAIN SYSTEM).
------------------------------------- = -----------------------------------
                                      =
BYTE 2.  (The CLOCK: "0 phase")       = (The CLOCK: "1 phase").
 - - - - - - - - - - - - - - - - - - - = - - - - - - - - - - - - - - - - - -
                                      =
Bit 0 := I                            = If "0" : No command
         I                            = If "1" : Command: "SET VARIWIND"
         I  In NORMAL OPERATION:      =
Bit 1 := I                            = If "0" : No command
         I                            = If "1" : Command: "SET PLAY PAUSE"
         I  Byte "0" (LSByte) of:     =
Bit 2 := I                            = If "0" : No command
         I  TAPE TIMER value.         = If "1" : Command: "SET RECORD PAUSE"
         I  (basic value in sec.)     =
Bit 3 := I                            = If "0" : "OTHER PANEL (remote) ON"
         I          OR:               = If "1" : "OTHER PANEL (remote) OFF"
         I                            =
Bit 4 := I  TAPE SPEED value.         = I  Panel output on: Bits 4 to 7:
         I  (basic value,loop count)  = I
         I                            = I  In NORMAL OPERATION: NOT USED
Bit 5 := I  OR during SELF TEST:      = I
         I                            = I  During SELF TEST: Four bit code
         I  Bits: 0 to 3: digit 1.    = I  to be returned as "digit 1,2,3,4"
Bit 6 := I                            = I
         I  Bits: 4 to 7: digit 2.    = I
         I                            = I
Bit 7 := I                            = I
         I                            = I
                                      =
-----------------------------------------------------------------------------
```

```
-----------------------------------------------------------------------
MAIN SYSTEM OUTPUT:                   = PANEL CONTROL OUTPUT:
(Input to PANEL).                     = (Input to MAIN SYSTEM).
------------------------------------- = --------------------------------
                                      =
BYTE 3.  (The CLOCK: "0 phase")       = (The CLOCK: "1 phase").
- - - - - - - - - - - - - - - - - - -  = - - - - - - - - - - - - - - - - -
                                      =
Bit 0 := I                            = : NOT USED
         I                            =
         I  In NORMAL OPERATION:      =
Bit 1 := I                            = : NOT USED
         I                            =
         I  Byte "1" (MSByte) of:     =
Bit 2 := I                            = : NOT USED
         I  TAPE TIMER value.         =
         I  (basic value in sec.)     =
Bit 3 := I                            = If "0" : "NORMAL OPERATION"
         I          OR:               = If "1" : "SELF TEST"
         I                            =
Bit 4 := I  TAPE SPEED value.         = I ALWAYS "0". The VERIFY PATTERN
         I  (basic value,loop count)  = I
         I                            = I
Bit 5 := I  OR during SELF TEST:      = I ALWAYS "1".  -    --     --
         I                            = I
         I  Bits: 0 to 3: digit 3.    = I
Bit 6 := I                            = I ALWAYS "0".  -    --     --
         I  Bits: 4 to 7: digit 4.    = I
         I                            = I
Bit 7 := I                            = I ALWAYS "1".  -    --     --
         I                            = I
                                      =
-----------------------------------------------------------------------
```

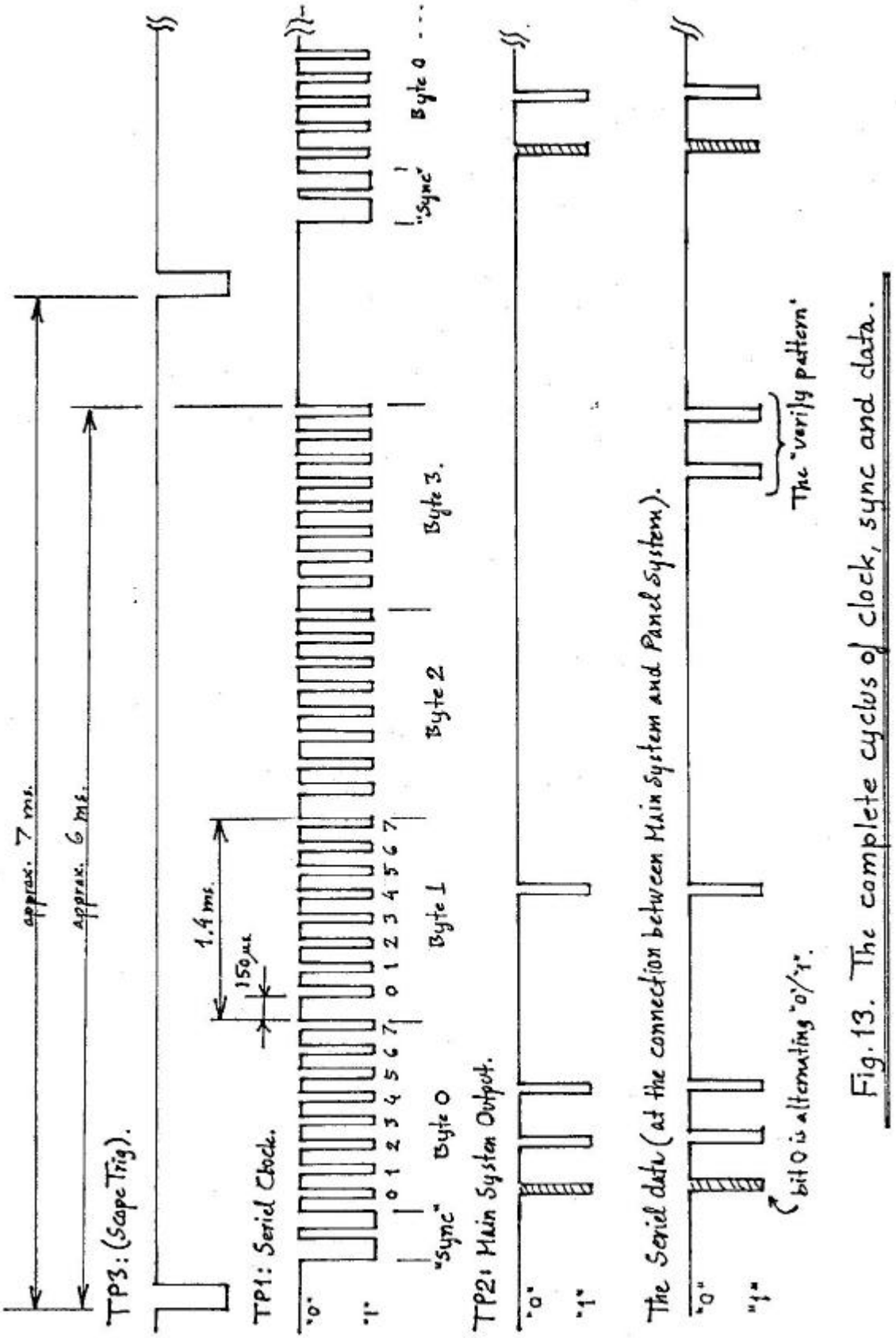

Fig. 13. The complete cycles of clock, sync and data.

Fig. 13 shows an example of a complete cycles of SYNC., CLOCK and DATA signals. The cycles shown relates to a machine in UNLOAD. The figure shows that the individual bytes can be located by referring to the CLOCK signal. The logic "0" period of the CLOCK signal is extended to approx. 150 us at the following positions in the transmission:

1: Between byte 0, bit 7, and byte 1 bit 0.

2: Between byte 1, bit 7, and byte 2 bit 0.

3: Between byte 2, bit 7, and byte 3 bit 0.

As many types of status and data values may vary in any machine state, it is not possible to state exactly what data can be expected in such a signal sequence. It is however possible to describe the expected type of variations which will be found (When not specified as "PANEL OUTPUT", the bits specified are outputs from the MAIN CONTROL SYSTEM):

Some bits are permanently "1" in this state, these are:

Byte 0, bit 4: Indicating that the machine is in state UNLOAD.
Byte 1, bit 4: Indicating an initialisation of the GOTO key function. (This results in a "GOTO LAST" on the next key activation).
Byte 3, bit 5 and 7: (PANEL OUTPUTS) are the "1"-bits of the VERIFY pattern.

Other bits may be either "1" or "0", these are:

Byte 0, bit 0: This bit will constantly alternate between two times "1" and two times "0", as the MAIN SYSTEM constantly alternates between the transmission of TAPE TIMER and TAPE SPEED values.
Byte 0, bit 1: Will maybe indicate Speed value NOT OK. (This indication will again be alternating, following the transmission of the TAPE SPEED value).
Byte 0, bit 2: Will depend upon the current position of the tape tacho roller. (If the tacho roller is turned by hand, bit 2 will change. The number of "1"-pulses per rotation will depend upon the setting of the tape speed selector. 3.75 "/4 pulses, 7.5 "/gives 2 pulses, and 15 "/1 pulse per tacho rotation).
Byte 0, bit 3: Will depend upon the current sign of the TAPE TIMER.
Byte 0, bit 7: Will depend upon the ON/OFF state of the TAPE TIMER. (This bit will toggle if the TIMER ON/OFF key is activated).
Byte 0, bit 0 to 7: (PANEL OUTPUT) These bits are normally all zero.

If the machine is forced to stay in the UNLOAD state, while a key is activated, the PANEL will transmit the "SOME KEY ACTIVE" command. This command is "BB" in hex. If observed at an oscilloscope, the PANEL OUTPUT (from left to right) will be:

(LSB) " 1 1 0 1 1 1 0 1 " (MSB).

Byte 2 and 3: These bytes will show the current values of TAPE TIMER and the TAPE SPEED. (The TAPE SPEED value will be transmitted even if byte 0, bit 1 is "1". The transmitted value is then the last measured value, but the measuring system is now in "under range").

To observe data in other machine states:

During NORMAL operation:

If there is tape on the machine, and the STOP key is activated, the machine will enter the STOP state. This can now be seen from the change in the transmitted status. If the "STOP" key or the "REC." key is now activated, the corresponding "single key status" can be seen in byte 0. If any other key is activated, the machine will immediately change to another state, and it is not possible to observe the transmitted codes at an oscilloscope.

If these types of signals (including multiple key commands), are to be observed, it must be done using either a logic analyser or a storage oscilloscope with sufficient memory to hold the time function of the signals.

During SELF TEST:

During PART-1 of the SELF TEST, only MAIN SYSTEM OUTPUT can be observed, as there is NO data transmitted from the panel.

During PART-2 and 3 of the SELF TEST, the cycle repetition rate is changed to 10 ms, and the panel will output test data in byte 2, bits 4 to 7. This code is then returned from the MAIN SYSTEM as four identical codes in byte 2 and 3. A consequence of this is that byte 2 bits 4 to 7 will be transmitting the SAME code in both directions simultaneously.

------ END OF DESCRIPTION OF THE FRIDA LOGIC CONTROL SYSTEM ------

FRIDA TIME CODE VERSION

SPECIFICATIONS:

Connector:	Code in/outputs at SYNCHRO connector.
Line input:	Electronically balanced and floating. Zin > 40 kohm
Line output:	Electronically balanced and floating. Zout < 40 ohm
Record level:	Automatic level control. 0.5 - 4 Vpp for 730 nWb/m pp (corresponding to 260 nWb/m RMS).
Playback level:	Automatic level control. 2 Vpp for flux > 500 nWb/m
Playback signal:	Re shaped.
Indicators:	Red LED for ready and record indication. Green LED for signal presence
Min. read speed:	Nominal speed/30
Max. read speed:	60 ips.
Adjustments:	P1; record flux level (nominally 730 nWb/m pp) P2; bias
Jumpers:	Rise time for code out; JP1 50 µS (IEC94-10) JP2 25 µS (NTSC) JP3 2,5 µS

OPERATION

The TC ready button toggles between SAFE (no light) and READY (flashing red LED). From ready, record is entered by pressing PLAY + RECORD indicated by a steady red light.

The time code output follows the monitor source selector (INPUT-SYNC-REPRO) according to the following table;

	TIME CODE OUTPUT		
MONITOR SOURCE SELECT=>	INPUT	SYNC	REPRO
MODE: PLAYBACK	SYNC	SYNC	REPRO
READY	INPUT	SYNC	REPRO
RECORD	INPUT	INPUT	REPRO

The green LED indicates if signal is present or not. With the monitor source selector it is possible to get indication if code is present pre or post tape.

The signal indicator is not a code reader and do not distinguish between "valid code" and other signals.

The playback amplifier is capable to read code at speed down to 1/30 of nominal speed. This is far beyond the varispeed range of the capstan system.

The maximum play speed is limited by the tape lifter which is activated at 60 ips.

LYREC MANUFACTURING A/S OCTOBER 1990

APPLICATION NOTE, FRIDA TAPE RECORDER.

FRIDA THEATRE APPLICATION, EFFECTS PLAYBACK.

FRIDA THEATRE DELAY ACTIVATED BY LEADER TAPE.

SYSTEM: Leader tape detector with delay line and tape deck logic.

HARDWARE:

A/ The tape presence sensor (reflex type) close to the erase head is replaced by a "see-through" infra red detector. The sensitivity of the sensor is adjustable to clearly define the difference between magnetic tape and all types of leader tape.

B/ An add-on delay line with interface to tape deck commands connected at the remote control connector at the back. The delay is individually adjustable for 7.5 and 15 ips with a delay range of 0.3 to 3 seconds.

FUNCTION: With the machine in PLAY mode and leader tape approaching, the optosensor will detect the beginning of the leader tape which will activate the preset delay and put the machine in PAUSE mode at end of the delay.

Pressing PAUSE (or using fader start) will start the machine, which will run until the next leader tape is detected and the procedure is repeated.

USER OPTIONS: Set jumper JM4 for either the normal reflex sensor (standard) or see through sensor as supplied with the theatre kit.

With potentiometers P1 and P2 the delay can be individually adjusted to suit the leader length being used.

The delay is normally terminated with a PAUSE command. Optional functions can be set with jumper JM1. Choose between PAUSE, GOTO and STOP. If set to position -- the leader tape will be ignored.

With the see through sensor the LED 1 will light up as long as the sensor detects leader tape.

With the standard reflex sensor the LED 1 will light up for normal magnetic tape and go out for leader tape.

Print terminals J3 #1-2 can be shorted by an external switch in order to disable the logic.

Encl. Diagram 2578 circuit and component layout.
Diagram 6604 Installation of sensor.

MODEL/NO	ERASE	RECORD	PLAY	
2/1, 2/1 BC 250012 250002				0.75 mm
2/2 250022				2 mm
2/2 S 250052				2 mm
2/F, 2/F BC 250042 250082				2 mm
TC 250032				0.35 mm 2 mm